TIMKEN

Where You Turn

Timken® Spherical Roller Bearing Catalog

TIMKEN
Where You Turn

INDEX

A

ENGINEERING

B

SPHERICAL ROLLER BEARINGS

SPHERICAL PILLOW BLOCKS

C

SPHERICAL ROLLER BEARING METRIC ACCESSORIES

TIMKEN. WHERE YOU TURN.

The world turns to Timken for innovation to move ahead of the competition. Our contributions to advancing work and living standards – through innovations surrounding friction management and power transmission – are invaluable. We have played a role in virtually all major technologies that have shaped our age, from automobile travel to artificial hearts. You'll find our products wherever you turn – on land, sea and in space.

When customers turn to us, they are turning to a worldwide team of 25,000 associates. Because of our ability to help their products perform better, customers honor us with more than 300 awards each year. Whether it is a wheel assembly for a family vehicle, bearings for a roller coaster, repair services for rail bearings or steel for an aircraft engine shaft, we supply the products and services that help keep the world turning.

FRICTION MANAGEMENT SOLUTIONS – A TOTAL SYSTEM APPROACH

As needs change and advanced motion control systems evolve, Timken is leveraging its knowledge of friction management to offer a broader array of bearings, related products and integrated services to the marketplace. We supply quality products and services that extend beyond bearings to help all systems run smoothly.

We are committed to providing a wide array of friction management solutions. Customers can benefit by having Timken, a trusted name for more than 100 years, evaluate entire systems, not just individual components. This approach provides cost-effective solutions, while also helping to achieve specific objectives.

TECHNOLOGY THAT MOVES YOU

Today, major industry turns to Timken for our ability to influence the fundamentals of motion through the creation, transfer, and control of power. We invest in people, attracting scholars, engineers and specialists from around the world. We invest in tools – computers, manufacturing equipment and state-of-the-art laboratories. And we invest in the future by identifying new concepts that will help Timken and its customers make their mark for years to come. Innovation is one of our core values.

The return on our technology investment has grown exponentially. Our associates increase the reliability of Timken® products and create designs that can set new performance standards. We help customers solve their immediate system issues, while developing the systems of tomorrow.

Our teams of engineers and scientists are dedicated to using everything they know about friction management and power transmission. They translate the scientific aspects of metallurgy, bearing operating characteristics, lubrication, torque, noise, heat treatment, advanced processing concepts and application development into friction management solutions.

Because our teams are located at technology centers in North America, Europe and Asia – as well as in our manufacturing facilities and field offices on six continents – customers have access to ideas and resources to transform concepts into reality. Our technology focuses on products, materials, processes and emerging technology to create new solutions.

BRANDS YOU CAN TRUST

Timken has built a strong tradition of quality, technology and innovation. A long list of customer certifications provides solid evidence that our products have earned customer trust. As our founder, Henry Timken, said, "Don't set your name to anything you will ever have cause to be ashamed of."

The Timken® brand also reflects the well-known quality of Torrington® and Fafnir® product lines. By leveraging the benefits of these brands from design to distribution, Timken gives customers expanded options and the security of knowing that each box contains an industry-trusted product.

ABOUT THE TIMKEN COMPANY

- Timken is a global, Fortune 500 company.
- Timken has ranked among the 250 largest U.S. industrial corporations since the 1920s, and it has been listed on the New York Stock Exchange since 1922.
- Timken has 13 technical and engineering centers in North America, Europe and Asia.
- Timken has more than 66 plants and 105 sales offices, customer service centers and distribution centers in 27 countries on six continents.

TIMKEN SPHERICAL ROLLER BEARINGS

Timken spherical roller bearings exceed industry standards for superior quality and performance and are designed to manage high radial loads, even when misalignment, marginal lubrication, contamination, extreme speeds, or critical application stresses are present.

That's why industries such as power generation, oilfield, steel, aggregate, cement, mining and power transmission turn to Timken for a complete line of high-performance spherical roller bearings. Through expertly designed critical dimensions, such as roller and raceway contact geometry and topography, our spherical roller bearings are helping customers increase productivity by reducing downtime and extending maintenance cycles.

PRODUCT BREADTH

Timken offers a complete line of spherical roller bearing designs ranging from 25 to 1500 millimeter bore (0.98 to 59.06 inches). Included in this broad portfolio are two fundamental design types: the Type CJ style and Type YM/YMB design.

Available in 25 to 200 millimeter bore (0.98 to 7.87 inches), Type CJ-style bearings offer higher load ratings for longer life and incorporate a stamped steel window-type cage. Similar to all spherical roller bearings, the CJ design compensates for dynamic and static misalignment and allows customers to use weldments for housing frames instead of complex castings.

Type YM bearings feature precision-machined, roller-riding brass cages and are designed for harsh industrial environments. These bearings offer higher load ratings for longer life. For larger bore sizes, the Type YMB design incorporates an inner-ring, land-riding cage. The YM/YMB design is produced in sizes ranging from 30 to 1500 millimeter bore (1.18 to 59.06 inches).

In addition to the CJ and YM/YMB designs, Timken spherical roller bearings can be ordered with several enhancements and modifications to extend life and improve performance in specific applications. For example, large-bore spherical bearings sometimes operate below the bearing's published speed rating, causing the cage to push a non-rotating roller across the raceways. This sliding action breaks down lubrication film and can ultimately damage the bearing. To help protect the bearing components, our engineered surfaces coating minimizes skidding and sliding damage, while withstanding small-particle contamination. In some cases, engineered surfaces can extend bearing life by up to five times standard designs, especially in demanding applications like paper and rolling mills.

As a Timken customer, you receive an uncompromising standard of quality across the broadest range of bearings and related products. Brands like Timken, Torrington and Fafnir reflect an extensive line of tapered, needle, spherical, cylindrical, ball bearings and mounted units ideal for virtually every industrial application. Our core products are complemented by an ever-growing line of friction management solutions including lubricants, single-point lubricators, maintenance tools, safety equipment, condition monitoring systems and repair services that help keep operations running smoothly.

SAFETY END CAPS

These easily installed caps offer a high degree of protection to maintenance personnel as well as to the bearings integrated within a housing.

HOUSED UNITS

Ball and spherical roller bearing pillow block units, featuring a unique sealing design, are easily installed.

CONDITION MONITORING DEVICES

From wireless units to online systems, condition monitoring devices give you powerful diagnostic tools to help detect potential bearing problems, maximizing machine uptime and lowering maintenance costs.

SPHERICAL ROLLER BEARING METRIC ACCESSORIES

Bearing sleeves and locking devices, in a wide range of metric sizes, complement our line of Timken spherical roller bearings. These accessories are manufactured to the same quality standards as our bearings, helping to ensure a secure fit to straight and stepped shafts. Bearing sleeves are available in two distinct designs, assembled adapter sleeves and withdrawal sleeves, in sizes up to 900 mm.

LUBRICANTS

Our portfolio of lubricants includes lubricants developed by our tribology experts. These lubricants keep bearings running smoothly in a variety of industrial conditions, including high heat, food processing and high speed. Timken also offers a line of single-point lubricators to simplify the delivery of grease.

REPAIR AND REPLACEMENT OPTIONS

By choosing to have bearings and other elements remanufactured, customers save money in replacement costs and maintain a steady supply of parts instead of purchasing new parts during downtimes. Timken provides bearing repair services for any type of roller bearing design, regardless of manufacturer.

MAINTENANCE HANDLING TOOLS

Convenient handling devices give technicians the tools they need to install, remove and service bearings. Products include impact fitting tools, induction heaters and hydraulic pullers.

INDUSTRIAL SEALS

Timken industrial seals are available in small-bore sizes, zero- to 13-inches, as well as in metric and high-temperature varieties. We also provide tools to speed installation, deter seal and bearing damage and prevent premature seal leakage. The seals and tools can be applied in a full range of equipment used in thousands of applications, including manufacturing, off-highway, power transmission and oil refineries.

ABOUT THIS CATALOG

Timken offers an extensive range of bearings and accessories in both imperial and metric sizes. For your convenience, size ranges are indicated both in millimeters and inches. Contact your Timken sales representative to learn more about our complete line for the special needs of your application.

USING THIS CATALOG

We are committed to providing our customers with maximum service and quality. This catalog contains dimensions, tolerances and load ratings, as well as an engineering section describing fitting practices for shafts and housings, internal clearances, materials, and other bearing features. It can provide valuable assistance in the initial consideration of the type and characteristics of the bearing that may best suit your particular needs.

CATALOG FEATURES

Dimension and load rating data for the various types and styles of bearings is organized by size.

ISO, DIN, and ABMA, as used in this catalog, refer to the International Organization for Standardization, Deutsches Institut für Normung EV and the American Bearing Manufacturers Association.

TERMS AND CONDITIONS OF SALE

All products described in this catalog are sold subject to Timken's Terms and Conditions of Sale.

It is understood that the buyer, in selecting and ordering from this catalog, which supersedes all previous editions, accepts all Timken Terms and Conditions of Sale, a copy of which may be obtained by your Timken sales office.

Note: *Product performance is affected by many factors beyond the control of Timken. Therefore, the suitability and feasibility of all designs and product selection should be validated by you. This catalog is provided solely to give you, a customer of Timken or its parent or affiliates, analysis tools and data to assist you in your design. No warranty, expressed or implied, including any warranty of fitness for a particular purpose, is made by Timken. Timken products are sold subject to the Limited Warranty.*

WARNING

Failure to observe the following warnings could lead to a risk of serious bodily harm:

Proper maintenance and handling practices are critical. Failure to follow installation instructions and to maintain proper lubrication can result in equipment failure creating a risk of serious bodily harm. Never spin a bearing with compressed air. The rollers may be forcefully expelled creating a risk of serious bodily harm.

LIMITED WARRANTY

We warrant for a period of one year from the date of shipment that our products shall be free of defects in material and workmanship, as shall be determined by our manufacturing standards, and shall conform to the description on the face of this acknowledgment. THE WARRANTY DESCRIBED HEREIN SHALL BE IN LIEU OF ANY OTHER WARRANTY, EXPRESS OR IMPLIED, INCLUDING BUT NOT LIMITED TO ANY IMPLIED WARRANTY OF MERCHANTABILITY OR FITNESS FOR A PARTICULAR PURPOSE. The terms contained herein constitute the entire agreement of the parties and the warranty representations of the seller. There are no other representations, warranties, or guarantees applicable to the sale of our products unless otherwise expressly agreed to by us in writing.

SPECIAL APPLICATIONS

Some products, such as for aerospace applications, are made to special standards, and only the original equipment manufacturer can determine if a particular bearing is suitable for use in their equipment.

PURCHASER'S EXCLUSIVE REMEDY/ SELLER'S EXPRESS LIMIT OF LIABILITY

Purchaser's exclusive remedy for any warranty claim, or for any claim arising out of the purchase or use of our products, shall be the replacement of said products. We will replace our products, without charge to the purchaser, f.o.b. our point of shipment. We will not be liable for any consequential, incidental, or other damages sustained by purchaser, including but not limited to, loss of profits or revenue, loss of use of product, cost of capital, cost of substituted product, facilities, services, or claims of purchaser's customers for any damages. Any warranty claim of purchaser must be made within one year of the date of shipment of the product. This exclusive remedy applies regardless of the nature of purchaser's claim, whether in contract, tort, express or implied warranty, negligence or strict liability, upon which damages are claimed and regardless of whether the same is due to our negligence or any defect in our product.

ROLLER BEARINGS

TO IDENTIFY: SPHERICAL ROLLER BEARINGS

The basic bearing number, plus any applicable modification code, is marked on the outer ring face (e.g., 22315CJW33).

If the bearing has a tapered inner ring bore, the letter K is marked on the inner ring face (in addition to the above outer ring face marking).

Replacement bearings, if straight bore, should be ordered by specifying bearing number plus the suffix nomenclature marked on outside face (e.g., 22315CJW33).

Replacement bearings, if a tapered bore, should be ordered as described above, except include the suffix "K" following basic bearing number (e.g., 22315KCJW33).

Note: Letter symbols marked on recessed pads on ring faces are not part of bearing nomenclature and therefore not relevant to replacement bearing number identification.

For a comprehensive description of spherical roller bearing nomenclature, see page 76.

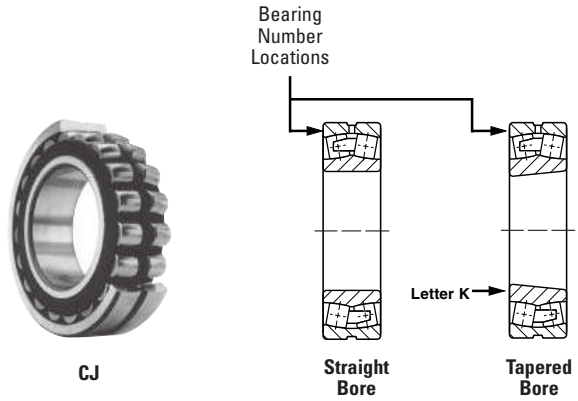

TO IDENTIFY: SPHERICAL ROLLER BEARING PILLOW BLOCK

The end cap and/or base housing is marked with a pillow block housing number (e.g., SAF517). The pillow block assembly number is closely affiliated with the housing number (e.g., SAF22517). Here, pillow block assembly uses the pillow block housing SAF517.

For a comprehensive description of spherical roller bearing pillow block nomenclature, see page 108.

HOW TO ORDER A REPLACEMENT BEARING

The ordering of correct replacement bearings is vital to minimizing downtime and ensuring the correct interchanges. Timken suggests that you follow these simple steps to identify your bearings and then proceed to the appropriate catalog section for the correct bearing catalog number. If no identification number is legible, measure the following dimensions:

1. Inner ring bore
2. Outer ring outside diameter
3. Inner width and outer width (not always the same dimension)
4. Shape of the outer ring: beveled vs. straight O.D.
5. List the unique features of the bearing or components such as: relubrication holes in the outer ring, wireloc (snap ring) groove in the outer ring O.D. Replacement and nomenclature information for Timken bearings is found under the "Introduction" section for each bearing type.

The term "modification code" refers to additional information, describing details and requirements, for specific bearing applications. A basic Timken bearing part number may be produced in a variety of special modifications to meet different application needs. The word "modification" in this context refers to all changes from standard for both commercial and non-commercial applications. This meaning is different from the term "modified for use in military applications" referred to in the ITAR regulations.

A ENGINEERING

B SPHERICAL ROLLER BEARINGS
SPHERICAL PILLOW BLOCKS

C SPHERICAL ROLLER BEARING
METRIC ACCESSORIES

ENGINEERING

A

A ENGINEERING

A

ENGINEERING

A

INTRODUCTION

Timken is a leader in the advancement of bearing technology. Expert craftsmanship, well-equipped production facilities, and a continuing investment in technology programs ensure that our products are synonymous with quality and reliability. Today, our plants manufacture thousands of bearing types and sizes to handle a wide range of application requirements.

Anti-friction bearings inherently manage broad ranges of speed and many combinations of radial and thrust loads. Environmental conditions such as low and high temperature, dust and dirt, moisture, and unusual mounting conditions, affect bearing operation.

If complex bearing applications are involved, consult your Timken representative.

ROLLER BEARING SELECTION PROCESS

Bearing selection is a process of evaluating the suitability of bearings for specific industrial applications. The quality of the available information to make these selections will play a major role in determining the success of the bearing choice.

The first step in bearing selection is identifying the proper roller element type, whether it is a ball, needle, cylindrical, spherical or tapered roller bearing. Each roller bearing type has advantages and disadvantages that are design-specific and will affect such things as the loads and speeds the bearing can sustain in the application.

Next, assess the size constraints of the bearing envelope or available space. This is done by considering the minimum shaft diameter, maximum housing bore and available width in the bearing application. After the bearing envelope is defined, search the catalog for bearings with bores, outer diameters and widths that will fit in the bearing envelope. There may be several bearings with different load-carrying capacities available that fit in the envelope.

Of the bearings fitting the envelope, the next step is to determine which of these bearings will give the desired life in the application by performing a bearing life analysis.

The bearing selection is completed once the design options are chosen. These options include cage type, cylindrical roller bearing flange arrangements, radial internal clearance or setting, and precision level and lubrication. These options are selected based on the application's speed, temperature, mounting and loading conditions, and will enable you to achieve optimum bearing performance and life.

This catalog assumes that a spherical roller bearing has been selected for the application, and highlights the data and methods to use during the selection process. For a closer look, your Timken representative can provide you with expert computer analysis to give you the most detailed information for your bearing application.

Characteristic	Tapered Roller Bearing	Thrust Tapered Roller Bearing	Cylindrical Roller Bearing	Thrust Cylindrical Roller Bearing	Spherical Roller Bearing	Thrust Spherical Roller Bearing	Ball Bearing	Thrust Ball Bearing	Needle Roller Bearing	Thrust Needle Roller Bearing
Pure Radial Load	Excellent	Unsuitable	Excellent	Unsuitable	Excellent	Unsuitable	Good	Poor	Excellent	Unsuitable
Pure Axial Load	Good	Excellent	Unsuitable	Good	Fair	Excellent	Fair	Excellent	Unsuitable	Excellent
Combined Load	Excellent	Fair	Fair	Unsuitable	Excellent	Fair	Good	Poor	Unsuitable	Unsuitable
Moment Load	Fair	Poor	Unsuitable	Unsuitable	Unsuitable	Unsuitable	Good	Poor	Fair	Unsuitable
High Stiffness	Excellent	Excellent	Good	Excellent	Good	Good	Fair	Good	Good	Excellent
Quiet Running	Fair	Fair	Good	Poor	Fair	Poor	Excellent	Good	Good	Fair
Low Friction	Fair	Fair	Good	Poor	Fair	Fair	Excellent	Excellent	Good	Good
Misalignment	Poor	Poor	Poor	Unsuitable	Excellent	Excellent	Good	Poor	Poor	Poor
Locating Position (Fixed)	Excellent	Good	Fair	Fair	Good	Good	Good	Excellent	Unsuitable	Excellent
Non-Locating Position (Floating)	Good	Unsuitable	Excellent	Unsuitable	Fair	Unsuitable	Good	Unsuitable	Good	Unsuitable
Speed	Good	Good	Good	Poor	Fair	Fair	Excellent	Excellent	Good	Poor

Table 1. Comparison of rolling element bearing types.

A

RADIAL SPHERICAL ROLLER BEARINGS

The principle styles of radial spherical roller bearings that Timken offers are: CJ, YM, YMD, and YMB.

CJ | YM / YMB | Tapered Bore Bearing with Adapter Sleeve Assembly

Fig. 1. Common design styles of Timken spherical roller bearings.

YM bearings offer the greatest range of sizes in all series. They combine design experience with proven performance in many industries.

All of the newer styles (CJ, YM, YMB and YMD) offer higher load ratings for longer life. CJ bearings include a stamped steel, window style cage and are suitable for a broad range of general service applications. For extreme conditions of use, the YM, YMB and YMD styles with a machined brass cage should be considered.

All styles are available in straight or tapered bores. Tapered bore bearings can be ordered by placing a "K" immediately after the numbers in the bearing description (e.g., 22311KYM). Tapered bore bearings are available with adapter sleeve assemblies consisting of sleeve, locknut and washer. Adapter sleeve assemblies are designated SNW (e.g., SNW117).

Timken spherical roller bearings have been developed to accommodate radial and axial loads. The internal geometry allows the inner ring to accommodate misalignment. This capability is unique to spherical roller bearings, allowing machine designers more tolerance and less restrictive assembly. Other data is listed.

Timken spherical roller bearings are available in a ten dimensional series conforming to ISO and ANSI/ABMA standards. See Fig. 2 for size range illustration.

OPTIONAL FEATURES AVAILABLE WITH TIMKEN SPHERICAL ROLLER BEARINGS

W33 Lubrication Groove and Oil Holes

A lubrication groove and three oil holes are provided in the bearing outer ring. This eliminates the expense of machining a channel in the housing bore for introducing lubricant to the bearing. This design feature allows the lubricant to flow between the roller paths, through a single lubrication fitting. The lubricant moves laterally outward from the center of the bearing, reaching all contact surfaces and "flushing" the bearing. To order, add the suffix "W33" to the bearing number (e.g., 22216CJW33).

W22 Selected Outside Diameter Bearings

Bearings with selected outside diameters are required in some applications. Timken spherical roller bearings are available with reduced outside diameter tolerance. This allows a close control of the fit between the bearing and housing.

To specify this feature, add the suffix "W22" to the bearing number (e.g., 22216CJW22).

Additional features are available, consult your Timken representative for more information.

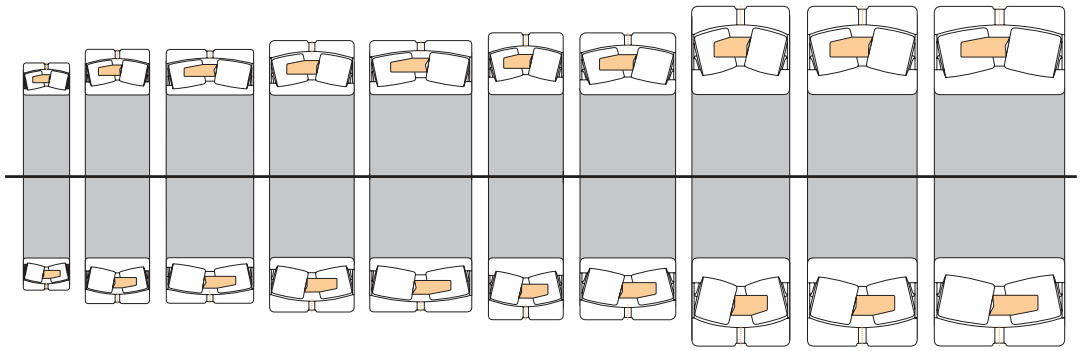

SERIES 239 230 240 231 241 222 232 213 223 233

Fig. 2. Standard ISO/ABMA series available from Timken.

CAGE DESIGNS

Cages (sometimes referred to as rolling element separators or retainers) perform an important function in the proper operation of rolling bearings. They maintain uniform rolling element spacing in the races of the inner and outer rings of the bearings as the rolling elements pass into and out of the load zones. Timken has developed cage types to meet various service requirements. Temperature limitations are described in the temperature limitations portion of the Engineering section on page 70.

CAGE DESCRIPTIONS

Brass Cages

YM, YMB and YMD bearing cages are centrifugally cast and precision machined from brass. (Note that the brass grades used are often commercially termed bronze.) Their rugged construction provides an advantage in more severe applications. The open-end design permits lubricant to reach all surfaces easily, assuring ample lubrication and a cooler running bearing.

YM and YMB are both one-piece designs that are differentiated by their means of guidance within the bearing. With YM designs, the cage mass is low and the rollers are used for guidance, while YMB cage designs typically have more mass and guide on the inner ring.

YMD cages are similar to YMB, except they have a two-piece design. Two independent cages, one for each row of rollers, are assembled into an individual bearing. This allows each row of rollers to rotate independently when required by the application, and prevents bending of the cage fingers.

VCSM designs are similar to YM in that they are single piece, finger style cages.

Stamped Steel Cages

These cages are used in CJ design to permit extra load carrying capabilities in the bearing compared to YM and YMB designs. This is accomplished through the use of a window style cage, which retains the rollers axially thus eliminating the need for ribs on the inner ring and allowing longer rollers. The window style cage is also held on both ends as opposed to finger style cages, thus allowing thinner bridge sections and often more rollers.

The CJ design also has two independent cages, one for each row of rollers, assembled in an individual bearing. This feature serves to prevent cage bending when the operating environment is favorable for this to occur. Some CJ bearings utilize a cast iron floating ring to guide the cage. Use of the floating ring is based on size and mass of the cage.

The VCSJ design is a finger style cage, similar to the VCSM, however it is pressed steel instead of brass.

Pin Type Cages

Large diameter spherical roller bearings can be supplied with these cages. The design of pin type cages permits an increased roller complement, giving the bearing enhanced load carrying ability. Consult your Timken representative for suggestions on the application of this cage.

YM Cage

YMB Cage

CJ Cage

Pin Type Cage

Fig. 3. Common cage styles for Timken spherical roller bearings.

A

DETERMINATION OF APPLIED LOADS AND BEARING REACTIONS

The following equations are used to determine the forces developed by machine elements commonly encountered in bearing applications.

SUMMARY OF SYMBOLS USED TO DETERMINE APPLIED BEARING LOADS AND BEARING ANALYSIS

Symbol	Description	Units
a_1	Reliability Life Factor	
a_2	Material Life Factor	
a_3	Operating Condition Life Factor	
a_{3d}	Debris Life Factor	
a_{3k}	Load Zone Life Factor	
a_{3l}	Lubrication Life Factor	
a_{3m}	Misalignment Life Factor	
a_{3p}	Low Load Life Factor	
a_e	Effective Bearing Spread	mm, in.
b	Tooth Length	mm, in.
c_1, c_2	Linear Distance (positive or negative)	mm, in.
C	Dynamic Radial Load Rating	N, lbf
C_0	Static Load Rating	N, lbf
C_p	Specific Heat of Lubricant	J/(kg x ˚C), BTU/(lb x ˚F)
d	Bearing bore diameter	mm, in.
d_0	Mean inner race diameter	mm, in.
d_c	Distance Between Gear Centers	mm, in.
d_m	Mean Bearing Diameter	mm, in.
d_s	Shaft inside diameter	mm, in.
D	Bearing outside diameter	mm, in.
D_0	Mean outer race diameter	mm, in.
D_h	Housing outside diameter	mm, in.
D_m	Mean Diameter or Effective Working Diameter of a Sprocket, Pulley, Wheel or Tire Also, Tapered Roller Mean Large Rib Diameter	mm, in.
D_{mG}	Mean or Effective Working Diameter of the Gear	mm, in.
D_{mP}	Effective Working Diameter of the Pinion	mm, in.
D_{mW}	Effective Working Diameter of the Worm	mm, in.
D_{pG}	Pitch Diameter of the Gear	mm, in.
D_{pP}	Pitch Diameter of the Pinion	mm, in.
D_{pW}	Pitch Diameter of the Worm	mm, in.
e	Life Exponent	
f	Lubricant Flow Rate	L/min, U.S. pt/min
f_0	Viscous Dependent Torque Coefficient	
f_1	Load Dependent Torque Coefficient	
f_B	Belt or Chain Pull Factor	
F	General Term for Force	N, lbf
F_a	Applied Thrust (Axial) Load	N, lbf
F_{aG}	Thrust Force on Gear	N, lbf
F_{aP}	Thrust Force on Pinion	N, lbf
F_{aW}	Thrust Force on Worm	N, lbf
F_b	Belt or Chain Pull	N, lbf
F_c	Centrifugal Force	N, lbf
F_r	Applied Radial Load	N, lbf
F_{sG}	Separating Force on Gear	N, lbf
F_{sP}	Separating Force on Pinion	N, lbf
F_{sW}	Separating Force on Worm	N, lbf
F_{te}	Tractive Effort on Vehicle Wheels	N, lbf
F_{tG}	Tangential Force on Gear	N, lbf
F_{tP}	Tangential Force on Pinion	N, lbf
F_{tW}	Tangential Force on Worm	N, lbf
F_W	Force of Unbalance	N, lbf
h	Horizontal (used as subscript)	
H	Power (kW or hp)	kW, hp
k	Centrifugal Force Constant	lbf/RPM^2
k_1	Bearing Torque Constant	
k_4, k_5, k_6	Dimensional Factor to calculate heat generation	
L	Lead Axial Advance of a Helix for One Complete Revolution	mm, in.
L	Distance between bearing geometric center lines	mm, in.
m	Gearing Ratio	
M	Bearing Operating Torque or Moment	N-m, N-mm, lb-in.
n	Bearing Operating Speed or General Term for Speed	rot/min, RPM
n_G	Gear Operating Speed (RPM)	rot/min, RPM
n_P	Pinion Operating Speed (RPM)	rot/min, RPM
n_W	Worm Operating Speed (RPM)	rot/min, RPM
N_G	Number of Teeth in the Gear	
N_P	Number of Teeth in the Pinion	
N_S	Number of Teeth in the Sprocket	
P_0	Static Equivalent Load	N, lbf
P_{0a}	Static Equivalent Thrust (Axial) Load	N, lbf
P_{0r}	Static Equivalent Radial Load	N, lbf
P_r	Dynamic Equivalent Radial Load	N, lbf
Q	Generated Heat or Heat Dissipation Rate	W, BTU/min
T	Torque	N-m, lb.-in.
v	Vertical (used as subscript)	
V	Linear Velocity or Speed	km/h, mph
V_r	Rubbing or Surface Velocity	m/s, fpm
X	Dynamic Radial Load Factor	
X_0	Static Radial Load Factor	
Y	Dynamic Thrust (Axial) Load Factor	
Y_0	Static Thrust (Axial) Load Factor	
Υ_G	Bevel Gearing – Gear Pitch Angle	deg.
	Hypoid Gearing – Gear Root Angle	deg.
Υ_P	Bevel Gearing – Pinion Pitch Angle	deg.
	Hypoid Gearing – Pinion Face Angle	deg.
α	Coefficient of linear expansion	mm/mm/˚C, in./in./˚F
δs	Interference fit of inner race on shaft	mm, in.
δh	Interference fit of outer race in housing	mm, in.
η	Efficiency, Decimal Fraction	
$\theta 1, \theta 2, \theta 3$	Gear Mesh Angles Relative to the Reference Plane	deg.
θi, θo	Oil inlet or outlet temperature	˚C, ˚F
λ	Worm Gear Lead Angle	deg.
μ	Coefficient of Friction	
ν	Lubricant Kinematic Viscosity	cSt
σ_0	Approximate Maximum Contact Stress	MPa, psi
Φ_G	Normal Tooth Pressure Angle for the Gear	deg.
Φ_P	Normal Tooth Pressure Angle for the Pinion	deg.
Ψ_G	Helix (Helical) or Spiral Angle for the Gear	deg.
Ψ_P	Helix (Helical) or Spiral Angle for the Pinion	deg.
ΔT	Temperature difference between shaft/inner race + rollers and housing/bearing outer race	˚C, ˚F
ρ	Lubricant Density	kg/m^3, lb/ft^3

Table 2.

DETERMINATION OF APPLIED LOADS AND BEARING REACTIONS - *continued*

GEARING

Spur Gearing (Fig. 4)

Tangential Force:

$$F_{tG} = \frac{(1.91 \times 10^7)\ H}{D_{pG} n_G} \text{ (newtons)}$$

$$= \frac{(1.26 \times 10^5)\ H}{D_{pG} n_G} \text{ (pounds-force)}$$

Separating Force:

$F_{sG} = F_{tG} \tan \Phi_G$

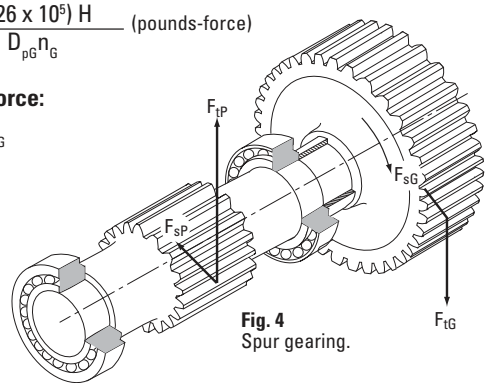

Fig. 4
Spur gearing.

Single Helical Gearing (Fig. 5)

Tangential Force:

$$F_{tG} = \frac{(1.91 \times 10^7)\ H}{D_{pG} n_G} \text{ (newtons)}$$

$$= \frac{(1.26 \times 10^5)\ H}{D_{pG} n_G} \text{ (pounds-force)}$$

Separating Force:

$$F_{sG} = \frac{F_{tG} \tan \Phi_G}{\cos \psi_G}$$

Thrust Torce:

$F_{aG} = F_{tG} \tan \psi_G$

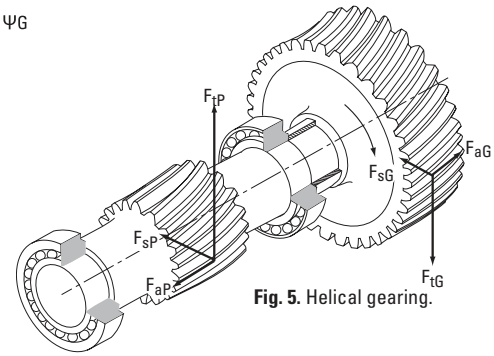

Fig. 5. Helical gearing.

Straight Bevel and Zerol Gearing with Zero Degrees Spiral

In straight bevel and zerol gearing, the gear forces tend to push the pinion and gear out of mesh, such that the direction of the thrust and separating forces are always the same regardless of direction of rotation. (Fig. 6) In calculating the tangential force, (F_{tP} or F_{tG}), for bevel gearing, the pinion or gear mean diameter, (D_{mP} or D_{mG}), is used instead of the pitch diameter, (D_{pP} or D_{pG}). The mean diameter is calculated as follows:

$D_{mG} = D_{pG} - b \sin\gamma_G$ or $D_{mP} = D_{pP} - b \sin\gamma_P$

In straight bevel and zerol gearing

$F_{tP} = F_{tG}$

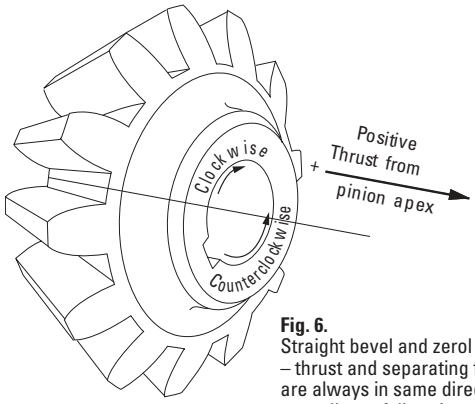

Fig. 6.
Straight bevel and zerol gears – thrust and separating force are always in same direction regardless of direction of rotation.

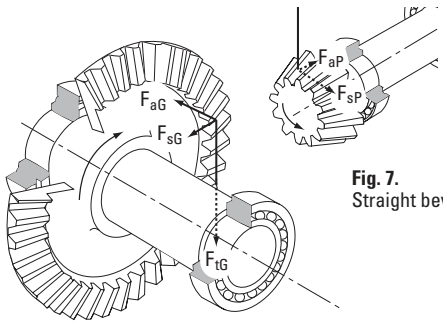

Fig. 7.
Straight bevel gearing.

A

DETERMINATION OF APPLIED LOADS AND BEARING REACTIONS - *continued*

Pinion:

Tangential Force:

$$F_{tP} = \frac{(1.91 \times 10^7)\ H}{D_{mP}\ n_P} \text{ (newtons)}$$

$$= \frac{(1.26 \times 10^5)\ H}{D_{mP}\ n_P} \text{ (pounds-force)}$$

Thrust Force:

$F_{\Phi P} = F_{tP} \tan \Phi_P \sin \gamma_P$

Separating Force:

$F_{sP} = F_{tP} \tan \Phi_P \cos \gamma_P$

Gear:

Tangential Force:

$$F_{tG} = \frac{(1.91 \times 10^7)\ H}{D_{mG}\ n_G} \text{ (newtons)}$$

$$= \frac{(1.26 \times 10^5)\ H}{D_{mG}\ n_G} \text{ (pounds-force)}$$

Thrust Force:

$F_{aG} = F_{tG} \tan \Phi_G \sin \gamma_G$

Separating Force:

$F_{sG} = F_{tG} \tan \Phi_G \cos \gamma_G$

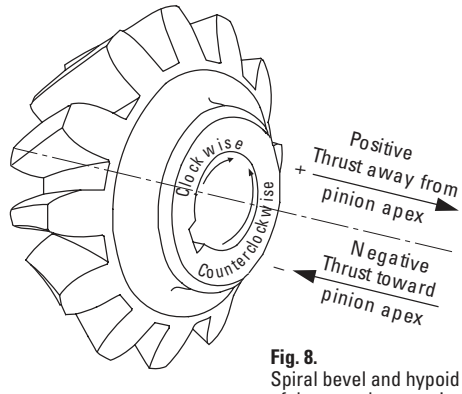

Fig. 8.
Spiral bevel and hypoid gears – the direction of thrust and separating forces depends upon spiral angle, hand of spiral, direction of rotation, and whether the gear is driving or driven.

Spiral Bevel and Hypoid Gearing

In spiral bevel and hypoid gearing, the direction of the thrust and separating forces depends upon spiral angle, hand of spiral, direction of rotation, and whether the gear is driving or driven (see Table 3). The hand of the spiral is determined by noting whether the tooth curvature on the near face of the gear (Fig. 8) inclines to the left or right from the shaft axis. Direction of rotation is determined by viewing toward the gear or pinion apex.

In spiral bevel gearing:

$F_{tP} = F_{tG}$

In hypoid gearing:

$$F_{tP} = \frac{F_{tG} \cos \psi_P}{\cos \psi_G}$$

Hypoid pinion effective working diameter:

$$D_{mP} = D_{mG} \left(\frac{N_P}{N_G}\right)\left(\frac{\cos \psi_G}{\cos \psi_P}\right)$$

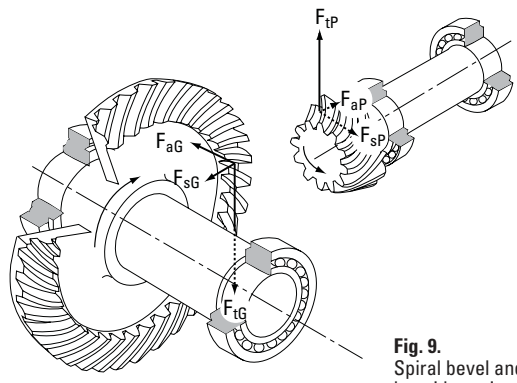

Fig. 9.
Spiral bevel and hypoid gearing.

DETERMINATION OF APPLIED LOADS AND BEARING REACTIONS - *continued*

SPIRAL BEVEL AND HYPOID GEARING EQUATIONS

Driving member rotation	Thrust force	Separating force
Right hand spiral clockwise or Left hand spiral counterclockwise	**Driving member** $F_{aP} = \frac{F_{tP}}{\cos \psi_P} (\tan \Phi_P \sin \gamma_P - \sin \psi_P \cos \gamma_P)$	**Driving member** $F_{sP} = \frac{F_{tP}}{\cos \psi_P} (\tan \Phi_P \cos \gamma_P + \sin \psi_P \sin \gamma_P)$
	Driven member $F_{aG} = \frac{F_{tG}}{\cos \psi_G} (\tan \Phi_G \sin \gamma_G + \sin \psi_G \cos \gamma_G)$	**Driven member** $F_{sG} = \frac{F_{tG}}{\cos \psi_G} (\tan \Phi_G \cos \gamma_G - \sin \psi_G \sin \gamma_G)$
Right hand spiral counterclockwise or Left hand spiral clockwise	**Driving member** $F_{aP} = \frac{F_{tP}}{\cos \psi_P} (\tan \Phi_P \sin \gamma_P + \sin \psi_P \cos \gamma_P)$	**Driving member** $F_{sP} = \frac{F_{tP}}{\cos \psi_P} (\tan \Phi_P \cos \gamma_P - \sin \psi_P \sin \gamma_P)$
	Driven member $F_{aG} = \frac{F_{tG}}{\cos \psi_G} (\tan \Phi_G \sin \gamma_G - \sin \psi_G \cos \gamma_G)$	**Driven member** $F_{sG} = \frac{F_{tG}}{\cos \psi_G} (\tan \Phi_G \cos \gamma_G + \sin \psi_G \sin \gamma_G)$

Table 3.

Straight Worm Gearing

Worm:

Tangential Force:

$$F_{tW} = \frac{(1.91 \times 10^7)\, H}{D_{pW}\, n_W} \quad \text{(newtons)}$$

$$= \frac{(1.26 \times 10^5)\, H}{D_{pW}\, n_W} \quad \text{(pounds-force)}$$

Thrust Force:

$$F_{aW} = \frac{(1.91 \times 10^7)\, H\, \eta}{D_{pG}\, n_G} \quad \text{(newtons)}$$

$$= \frac{(1.26 \times 10^5)\, H\, \eta}{D_{pG}\, n_G} \quad \text{(pounds-force)}$$

or

$$F_{aW} = \frac{F_{tW}\, \eta}{\tan \lambda}$$

Separating Force:

$$F_{sW} = \frac{F_{tW} \sin \Phi}{\cos \Phi \sin \lambda + \mu \cos \lambda}$$

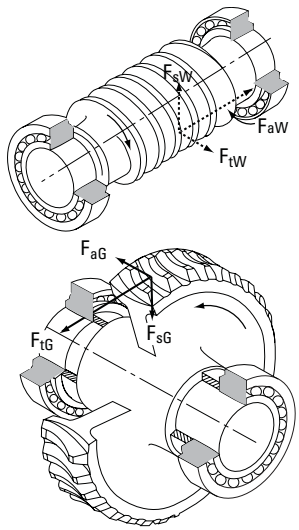

Fig. 10.
Straight worm gearing.

A

DETERMINATION OF APPLIED LOADS AND BEARING REACTIONS - *continued*

Worm Gear:

Tangential Force:

$$F_{tG} = \frac{(1.91 \times 10^7)\, H\, \eta}{D_{pG}\, n_G} \quad \text{(newtons)}$$

$$= \frac{(1.26 \times 10^5)\, H\, \eta}{D_{pG}\, n_G} \quad \text{(pounds-force)}$$

or

$$F_{tG} = \frac{F_{tW}\, \eta}{\tan \lambda}$$

Thrust Force:

$$F_{aG} = \frac{(1.91 \times 10^7)\, H}{D_{pW}\, n_W} \quad \text{(newtons)}$$

$$= \frac{(1.26 \times 10^5)\, H}{D_{pW}\, n_W} \quad \text{(pounds-force)}$$

Separating Force:

$$F_{sG} = \frac{F_{tW} \sin \Phi}{\cos \Phi \sin \lambda + \mu \cos \lambda}$$

Where:

$$\lambda = \tan^{-1} \left(\frac{D_{pG}}{m\, D_{pW}} \right)$$

or

$$\lambda = \tan^{-1} \left(\frac{L}{\pi D_{pW}} \right)$$

and

$$\eta = \frac{\cos \Phi - \mu \tan \lambda}{\cos \Phi + \mu \cot \lambda}$$

Metric System:

$$^*\mu = 5.34 \times 10^{-7}\, V_r^3 + \frac{0.146}{V_r^{0.09}} - 0.103$$

$$V_r = \frac{D_{pW}\, n_W}{(1.91 \times 10^4) \cos \lambda} \quad \text{(m/s)}$$

Inch System:

$$\mu^* = 7 \times 10^{-14}\, V_r^3 + \frac{0.235}{V_r^{0.09}} - 0.103$$

$$V_r = \frac{D_{pW}\, n_W}{3.82 \cos \lambda} \quad \text{(fpm)}$$

***Approximates coefficient of friction as given in AGMA standard 440.04, October 1971, Table 4, for 0.015 to 15 m/s (3 to 3000 fpm) rubbing velocity range.**

Double Enveloping Worm Gearing

Worm

Tangential Force:

$$F_{tW} = \frac{(1.91 \times 10^7)\, H}{D_{mW}\, n_W} \quad \text{(newtons)}$$

$$= \frac{(1.26 \times 10^5)\, H}{D_{mW}\, n_W} \quad \text{(pounds-force)}$$

***Thrust Force:**

$$F_{aW} = 0.98\, F_{tG}$$

*Use this value for F_{tG} for bearing loading calculations on worm gear shaft. For torque calculations, use the following F_{tG} equations.

Separating Force:

$$F_{sW} = \frac{0.98\, F_{tG} \tan \Phi}{\cos \lambda}$$

Worm Gear:

****Tangential Force:**

$$F_{tG} = \frac{(1.91 \times 10^7)\, H\, m\, \eta}{D_{pG}\, n_W} \quad \text{(newtons)}$$

$$= \frac{(1.26 \times 10^5)\, H\, m\, \eta}{D_{pG}\, n_W} \quad \text{(pounds-force)}$$

or

$$F_{tG} = \frac{(1.91 \times 10^7)\, H\, \eta}{D_{pG}\, n_G} \quad \text{(newtons)}$$

$$= \frac{(1.26 \times 10^5)\, H\, \eta}{D_{pG}\, n_G} \quad \text{(pounds-force)}$$

****Use this value for calculating torque in subsequent gears and shafts. For bearing loading calculations, use the equation for F_{aW}.**

Thrust Force:

$$F_{aG} = \frac{(1.91 \times 10^7)\, H}{D_{mW}\, n_W} \quad \text{(newtons)}$$

$$= \frac{(1.26 \times 10^5)\, H}{D_{mW}\, n_W} \quad \text{(pounds-force)}$$

Separating Force:

$$F_{sG} = \frac{0.98\, F_{tG} \tan \Phi}{\cos \lambda}$$

Where:

η = efficiency (refer to manufacturer's catalog)

$D_{mW} = 2d_c - 0.98\, D_{pG}$

Lead angle at center of worm:

$$\lambda = \tan^{-1} \left(\frac{D_{pG}}{m\, D_{pW}} \right) \quad \text{or} \quad = \tan^{-1} \left(\frac{L}{\pi\, D_{pW}} \right)$$

DETERMINATION OF APPLIED LOADS AND BEARING REACTIONS - *continued*

BELT AND CHAIN DRIVE FACTORS

Due to variations of belt tightness as set by various operators, an exact equation relating total belt pull to tension F_1 on the tight side and tension F_2 on the slack side, Fig. 11, is difficult to establish. The following equation and Table 4 may be used to estimate the total pull from various types of belts and pulley, and chain and sprocket designs.

$$F_b = \frac{(1.91 \times 10^7)\, H f_B}{D_m\, n} \quad \text{(newtons)}$$

$$= \frac{(1.26 \times 10^5)\, H f_B}{D_m\, n} \quad \text{(pounds-force)}$$

Standard roller chain sprocket mean diameter:

$$D_m = \frac{P}{\sin\left(\frac{180}{N_s}\right)}$$

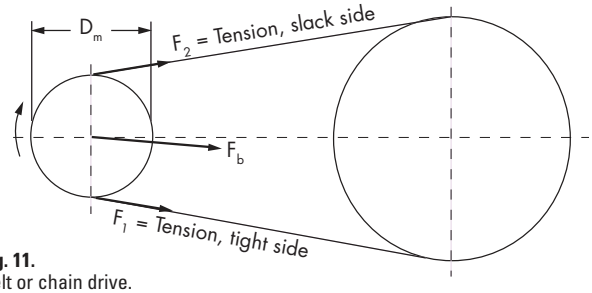

Fig. 11.
Belt or chain drive.

Type	f_B
Chains, single	**1.00**
Chains, double	**1.25**
"V" belts.....	**1.50**

Table 4. Belt or chain pull factor based on 180 degrees angle of wrap.

SHOCK LOADS

It is difficult to determine the exact effect that shock loading has on bearing life. The magnitude of the shock load depends on the masses of the colliding bodies, their velocities, and deformations at impact.

The effect on the bearing depends on how much of the shock is absorbed between the point of impact and the bearings, as well as whether the shock load is great enough to cause bearing failure. It also is dependent on frequency and duration of shock loads.

As a minimum, a suddenly applied load is equivalent to twice its static value. It may be considerably more than this, depending on the velocity of impact.

Shock involves a number of variables that generally are not known or easily determined. Therefore, it is good practice to rely on experience. Timken has years of experience with many types of equipment under the most severe loading conditions. Your Timken representative should be consulted on any application involving unusual loading or service requirements.

CENTRIFUGAL FORCE

Centrifugal force resulting from imbalance in a rotating member:

$$F_c = \frac{F_w\, r\, n^2}{8.94 \times 10^5} \quad \text{(newtons)}$$

$$= \frac{F_w\, r\, n^2}{3.52 \times 10^4} \quad \text{(pounds-force)}$$

TRACTIVE EFFORT AND WHEEL SPEED

The relationships of tractive effort, power, wheel speed and vehicle speed are:

$$H = \frac{F_{te}\, V}{3600}$$ (for H in kilowatts, V in kilometers per hour and F_{te} in Newtons)

$$H = \frac{F_{te}\, V}{375}$$ (for H in horsepower, V in miles per hour and F_{te} in pounds)

and

$$n = \frac{5300V}{D_m}$$ (for n in revolutions per minute, V in kilometers per hour and D_m in millimeters)

$$n = \frac{336V}{D_m}$$ (for n in revolutions per minute, V in miles per hour and D_m in inches)

A

DETERMINATION OF APPLIED LOADS AND BEARING REACTIONS - *continued*

BEARING REACTIONS

To allow for misalignment between the shaft and housing axes, a spherical roller bearing is self-aligning. That is, the effective center for each row of rollers intersects the shaft axis at the bearing geometric center as shown in Fig. 12. As the distance between effective centers for each row of a bearing is zero (i.e. zero moment arm), a pure couple cannot be generated internal to the bearing. Therefore, when a shaft and housing are misaligned, the inner and outer rings of the bearing rotate up to a few degrees relative to each other, without creating internal forces. This self-aligning capability in turn prevents an external moment load from being supported by the bearing. Therefore, spherical roller bearings can only accommodate external shaft and housing loads through radial and axial reaction forces.

Typically, one bearing on a shaft system is fixed axially and reacts radial and axial forces. The other bearings on the shaft are usually mounted with loose fits and axial space to allow movement, or float, for environmental conditions such as uneven thermal growth between the shaft and housing. Fig. 12 shows a common two bearing-shaft system where one bearing is free to move axially (float position) and cannot accommodate axial loading, while the other bearing is constrained axially (fixed position) and reacts the axial and radial applied loading.

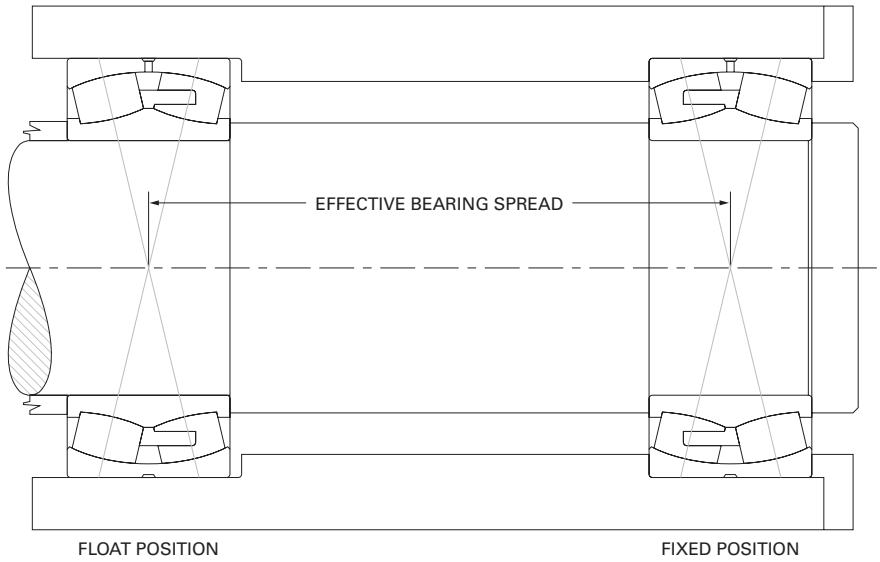

Fig. 12. Typical mounting configuration for spherical roller bearings showing the position of effective load carrying centers.

SHAFT ON TWO SUPPORTS

Simple beam equations are used to translate the externally applied forces on a shaft into bearing reactions acting at the bearing effective centers. Following is an example calculation for a shaft with two spherical roller bearings supporting a single helical gear.

Shown are equations for the case of a shaft on two supports with gear forces F_t (tangential), F_s (separating), and F_a (thrust), an external radial load F, and an external moment M. The loads are applied at arbitrary angles (θ_1,θ_2, and θ_3) relative to the reference plane indicated in Fig. 13. Using the principle of superposition, the equations for vertical and horizontal reactions (F_{rv} and F_{rh}) can be expanded to include any number of gears, external forces or moments. Use signs as determined from gear force equation.

SHAFT ON THREE OR MORE SUPPORTS

The equations of static equilibrium are insufficient to solve bearing reactions on a shaft having more than two supports. Such cases can be solved using computer programs if adequate information is available.

In such problems, the deflections of the shaft, bearings and housings affect the distribution of loads. Any variance in these parameters can significantly affect bearing reactions.

DETERMINATION OF APPLIED LOADS AND BEARING REACTIONS - *continued*

Symbol	Description	Units
a_e	Distance between bearing effective centers	mm, in.
A, B	Bearing position, used as subscripts	
c_1, c_2	Linear distance (positive or negative)	mm, in.
F	Applied force	N, lbf
F_r	Radial bearing load	N, lbf
F_a	Axial bearing load	N, lbf
h	Horizontal (used as subscript)	
H	Power	kW,hp
M	Moment	N-mm, lbf. in.
v	Vertical (used as subscript)	
$\theta_1,\theta_2,\theta_3$	Gear mesh, applied force and moment angles respectively, relative to plane of reference defined in Fig. 13	degree

Table 5. Symbols used in calculation examples.

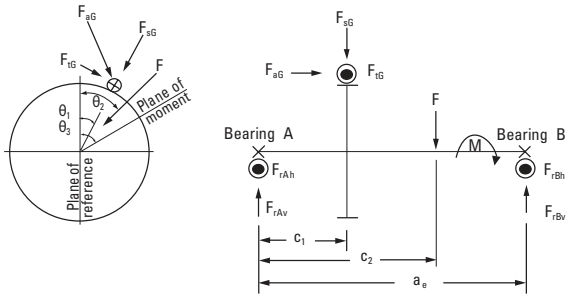

Fig. 13. Bearing radial reactions.

Bearing radial loads are determined by:

1. Resolving forces applied to the shaft into horizontal and vertical components, relative to a convenient reference plane.
2. Taking moments about the opposite support.
3. Combining the horizontal and vertical reactions at each support into one resultant load.

Vertical reaction component at bearing position:

$$F_{rBv} = \frac{1}{a_e}\left[c_1 (F_{sG} \cos \theta_1 + F_{tG} \sin \theta_1) + \frac{1}{2}(D_{pG} - b \sin \gamma_G) F_{aG} \cos \theta_1 + c_2 F \cos \theta_2 + M \cos \theta_3\right]$$

Horizontal reaction component at bearing position:

$$F_{rBh} = \frac{1}{a_e}\left[c_1 (F_{sG} \sin \theta_1 - F_{tG} \cos \theta_1) + \frac{1}{2}(D_{pG} - b \sin \gamma_G) F_{aG} \sin \theta_1 + c_2 F \sin \theta_2 + M \sin \theta_3\right]$$

Vertical reaction component at bearing position A:

$$F_{rAv} = F_{sG} \cos \theta_1 + F_{tG} \sin \theta_1 + F \cos \theta_2 - F_{rBv}$$

Horizontal reaction component at bearing position A:

$$F_{rAh} = F_{sG} \sin \theta_1 - F_{tG} \cos \theta_1 + F \sin \theta_2 - F_{rBh}$$

Resultant radial reaction:

$$F_{rA} = (F_{rAv}^2 + F_{rAh}^2)^{1/2}$$

$$F_{rB} = (F_{rBv}^2 + F_{rBh}^2)^{1/2}$$

Resultant axial reaction:

$$F_{aA} = F_{aG} \text{ (fixed position)}$$

$$F_{aB} = 0 \text{ (float position)}$$

A

LOAD RATINGS, EQUIVALENT LOADS AND BEARING LIFE

The basic dynamic load rating and the static load rating are commonly used for bearing selection. The basic dynamic load rating is used to estimate the life of a rotating bearing. Static load ratings are used to determine the maximum permissible load that can be applied to a non-rotating bearing.

The basic philosophy of Timken is to provide the most realistic bearing rating to assist our customers in the bearing selection process. Published ratings for Timken bearings include the basic dynamic radial load rating C_1. This value is based on a basic rating life of one million revolutions. The basic static radial load rating is C_0.

STATIC EQUIVALENT LOADS

The static equivalent load rating is based on an assumed nominal clearance in both rows of rollers within the bearing, which equates to a load zone of approximately 130º. The static equivalent load is the radial load that will result in the same maximum contact stress as the applied bearing load. The load factors X_0 and Y_0 are used with the following equation to estimate the static radial equivalent load. The values of X_0 (always equal to 1 for SRBs) and Y_0 are listed in the bearing tables.

$$P_{0r} = X_0 F_r + Y_0 F_a$$

STATIC LOAD RATING

The basic static radial load rating and thrust load rating for Timken bearings are based on a maximum contact stress within a non-rotating bearing of 4000 Mpa (580 ksi) at the center of contact on the most heavily loaded roller.

The 4000 Mpa (580 ksi) stress levels may cause visible light Brinell marks on the bearing raceways. This degree of marking will not have a measurable effect on fatigue life when the bearing is subsequently rotating under a lower application load. If sound, vibration or torque is critical, or if a pronounced shock load is present, a lower load limit should be applied. For more information on selecting a bearing for static load conditions, consult your Timken representative.

MAXIMUM CONTACT STRESS

For all spherical roller bearings, the maximum contact stress can be approximated using the static equivalent load and the static rating.

$$\sigma_0 = 4000 \cdot \left(\frac{P_0}{C_0}\right)^{1/2} \text{ MPa}$$

$$\sigma_0 = 580 \cdot \left(\frac{P_0}{C_0}\right)^{1/2} \text{ ksi}$$

Where:

σ_0 = maximum contact stress
P_0 = radial equivalent load
C_0 = static load rating

EQUIVALENT DYNAMIC RADIAL BEARING LOADS (P_r)

The basic dynamic radial load rating, C_1, is assumed to be the radial load carrying capacity with a 180º load zone in the bearing. The dynamic equivalent radial load is defined as a single radial load that, if applied to the bearing, will result in the same life as the combined loading under which the bearing operates.

To calculate the L_{10} life, it is necessary to calculate a dynamic equivalent radial load, designated by P_r.

$$P_r = XF_r + YF_a$$

Where:

P_r = Dynamic Equivalent Radial Load
F_r = Applied Radial Load
F_a = Applied Axial Load
X = Dynamic Radial Load Factor
Y = Dynamic Axial Load Factor

For spherical roller bearings, the values of X and Y are dependent on the amount of the axial load. Calculate the ratio of the axial load to the radial load. Compare this ratio to the e value for the bearing. Note that values for e, X, and Y are available in the bearing tables.

LOAD RATINGS, EQUIVALENT LOADS AND BEARING LIFE- *continued*

MINIMUM BEARING LOAD

Slippage can occur if loads are too light and can cause damage to the bearings. The minimum load for radial spherical roller bearings is $P_r/C_1 = 0.04$ (P_r is the dynamic equivalent radial load and C_1 the basic dynamic load rating).

BEARING LIFE

Many different performance criteria exist that dictate how a bearing should be selected. These include bearing fatigue life, rotational precision, power requirements, temperature limits, speed capabilities, sound, etc. This section deals primarily with bearing life as related to material-associated fatigue. Bearing life is defined as the length of time, or number of revolutions, until a fatigue spall of 6 mm^2 (0.01 $in.^2$) develops. Since metal fatigue is a statistical phenomenon, the life of an individual bearing is impossible to precisely predetermine. Bearings that may appear to be identical can exhibit considerable life scatter when tested under identical conditions. Thus it is necessary to base life predictions on a statistical evaluation of a large number of bearings operating under similar conditions. The Weibull distribution function is commonly used to predict life of a population of bearings

RATING LIFE

Rating life (L_{10}) is the life that 90 percent of a group of apparently identical bearings will complete or exceed before a fatigue spall develops. The L_{10} life also is associated with 90 percent reliability for a single bearing under a certain load.

BEARING LIFE EQUATIONS

Traditionally, the L_{10} life has been calculated as follows for bearings under radial or combined loading where the dynamic equivalent radial load (P^r) has been determined:

$$L_{10} = \left(\frac{C_1}{P_r}\right)^{10/3} (1x10^6) \quad \text{(revolutions)}$$

or,

$$L_{10} = \left(\frac{C_1}{P_r}\right)^{10/3} \left(\frac{1x10^6}{60n}\right) \quad \text{(hours)}$$

With increased emphasis on the relationship between the reference conditions and the actual environment in which the bearing operates in the machine, the traditional life equations have been expanded to include certain additional variables that affect bearing performance. The approach whereby these factors are considered in the bearing analysis and selection, has been termed Bearing Systems Analysis (BSA).

The ISO/ABMA expanded bearing life equation is:

$$L_{10a} = a_1 a_2 a_3 L_{10}$$

Where:

a_1 = Reliability Life Factor
a_2 = Material Life Factor
a_3 = Operating Condition Life Factor (to be specified by the manufacturer)

The Timken expanded bearing life equation is:

$$L_{10a} = a_1 a_2 a_{3d} a_{3k} a_{3l} a_{3m} a_{3p} \left(\frac{C_1}{P_r}\right)^{10/3} (1x10^6)$$

Where:

a_1 = Reliability Life Factor
a_2 = Material Life Factor
a_{3d} = Debris Life Factor
a_{3k} = Load Zone Life Factor
a_{3l} = Lubrication Life Factor
a_{3m} = Misalignment Life Factor
a_{3p} = Low Load Life Factor

A

LOAD RATINGS, EQUIVALENT LOADS AND BEARING LIFE- *continued*

RELIABILITY LIFE FACTOR (A_1)

The equation for the life adjustment factor for reliability is:

$$a_1 = 4.26 \left(\ln \frac{100}{R}\right)^{2/3} + 0.05$$

ln = natural logarithm (base e)

To adjust the calculated L_{10} life for reliability, multiply by the a_1 factor. If 90 (90 percent reliability) is substituted for R in the above equation, a_1 = 1. For R = 99 (99 percent reliability), a_1 = 0.25. Table 6 lists the reliability factor for commonly used reliability values.

R (percent)	L_n	a_1
90	L_{10}	1.00
95	L_5	0.64
96	L_4	0.55
97	L_3	0.47
98	L_2	0.37
99	L_1	0.25
99.5	$L_{0.5}$	0.175
99.9	$L_{0.1}$	0.093

Table 6. Reliability life factor.

Note that the equation for reliability adjustment assumes there is a short minimum life below which the probability of bearing damage is minimal (e.g., zero probability of bearing damage producing a short life). Extensive bearing fatigue life testing has shown the minimum life, below which the probability of bearing damage is negligible, can be larger than shown above. For a more accurate prediction of bearing lives at high levels of reliability, consult your Timken representative.

MATERIAL LIFE FACTOR (a_2)

The life adjustment factor for bearing material (a_2) for standard Timken bearings manufactured from bearing quality steel is 1.0. Bearings also are manufactured from premium steels, containing fewer and smaller inclusion impurities than standard steels and providing the benefit of extending bearing fatigue life (e.g., Duraspexx™). Application of the material life factor requires that fatigue life is limited by nonmetallic inclusions, contact stresses are approximately less than 2400 Mpa (350 ksi), and adequate lubrication is provided. It is important to note that improvements in material cannot offset poor lubrication in an operating bearing system. Consult your Timken representative for applicability of the material factor.

DEBRIS LIFE FACTOR (a_{3d})

Debris in a lubrication system reduces the life of a roller bearing by creating indentations on the contacting surfaces, leading to stress risers. The Timken life rating equations were developed based on test data obtained with 40 µm oil filtration and measured ISO cleanliness levels of approximately 15/12, which is typical of cleanliness levels found in normal industrial machinery. When more or less debris is present within the system, the fatigue life predictions can be adjusted according to the measured or expected lubricant cleanliness level to more accurately reflect the expected bearing performance.

As opposed to determining the debris life factor based on filtration and cleanliness levels, a Debris Signature Analysis™ can be performed for more accurate bearing performance predictions. The Debris Signature Analysis is a process for determining the effects of the actual debris present in your system on the bearing performance. The typical way this occurs is through measurements of dented/bruised surfaces on actual bearings run in a given application. This type of analysis can be beneficial because different types of debris cause differing levels of performance, even when they are of the same size and amount in the lubricant. Soft, ductile particles can cause less performance degradation than hard, brittle particles. Hard, ductile particles are typically most detrimental to bearing life. Brittle particles can break down, thus not affecting performance to as large a degree as hard, ductile particles. For more information on Debris Signature Analysis or the availability of debris resistant bearings for your application, consult your Timken representative.

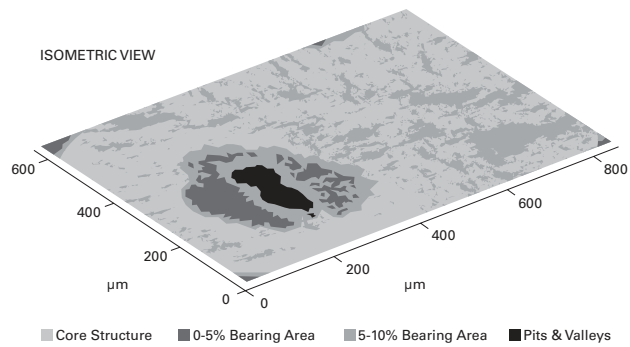

Fig. 14. Surface map of a debris dented bearing raceway.

LOAD RATINGS, EQUIVALENT LOADS AND BEARING LIFE- *continued*

LOAD ZONE LIFE FACTOR (a_{3k})

The fatigue life of a bearing is a function of the stresses in rollers and raceways and the number of stress cycles that the loaded bearing surfaces experience in one bearing revolution. The stresses depend on applied load and on how many rollers support that load. The number of stress cycles depends on bearing geometry and on how many rollers support the load. Therefore, life for a given external load is related to the loaded arc, or load zone, of the bearing.

The load zone in a bearing is dominated by the internal clearance, either radial or axial depending on the bearing type. Neglecting preload, less clearance in a bearing results in a larger load zone and subsequently longer bearing life.

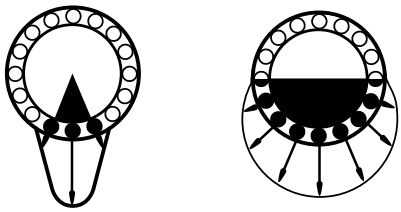

Fig. 15. Bearing load zones and roller-raceway contact loading.

Using the dynamic equivalent load (P_r) instead of the applied radial load (F_r) in the equation for L_{10a} roughly approximates the load zone factor for combined loading only. If a more accurate assessment of the load zone adjusted life is necessary (e.g., including the effects of internal clearance or fitting practice), consult your Timken representative.

LUBRICATION LIFE FACTOR (a_{3l})

The influence of lubrication film due to elastohydrodynamic (EHL) lubrication on bearing performance is related to the reduction or prevention of asperity (metal-metal) contact between the bearing surfaces. Extensive testing has been done at the Timken Technology Center to quantify the effects of the lubrication-related parameters on bearing life. It has been found that the roller and raceway surface finish, relative to lubricant film thickness, has the most notable effect on improving bearing performance. Factors such as bearing geometry, material, loads and load zones also play an important role in bearing performance.

The following equation provides a method to calculate the lubrication factor for a more accurate prediction of the influence of lubrication on bearing life (L_{10a}).

$$a_{3l} = C_g \cdot C_l \cdot C_s \cdot C_v \cdot C_{gr}$$

Where:

C_g = geometry factor
C_l = load factor
C_s = speed factor
C_v = viscosity factor
C_{gr} = grease lubrication factor

Note: The a_{3l} maximum is 2.88 for all bearings. The a_{3l} minimum is 0.200 for case carburized bearings and 0.126 for through hardened bearings.

A lubricant contamination factor is not included in the lubrication factor because Timken endurance tests are typically run with a 40 µm filter to provide a realistic level of lubricant cleanliness for most applications.

GEOMETRY FACTOR (C_g)

C_g is given for most part numbers in the bearing tables. The geometry factor also includes the material effects and load zone considerations, as these also are inherent to the bearing design. However, it should be noted that the primary effect of the load zone is on roller load distributions and contact stresses within the bearing, which are not quantified in the lubrication factor. Refer to the previous section load Zone Life Factor (a_{3k}) for more information.

Note that the geometry factor (C_g) factor is not applicable to our Duraspexx™ product. For more information on our Duraspexx™ product, consult your Timken representative.

A

LOAD RATINGS, EQUIVALENT LOADS AND BEARING LIFE- *continued*

LOAD FACTOR (C_l)

The C_l factor is obtained from Fig. 16. The equivalent dynamic radial load (P_r) applied to the bearing is shown in newtons and is determined in the equivalent bearing loads (P_r) section.

LOAD FACTOR (C_l) VS. EQUIVALENT BEARING LOAD (P_r)

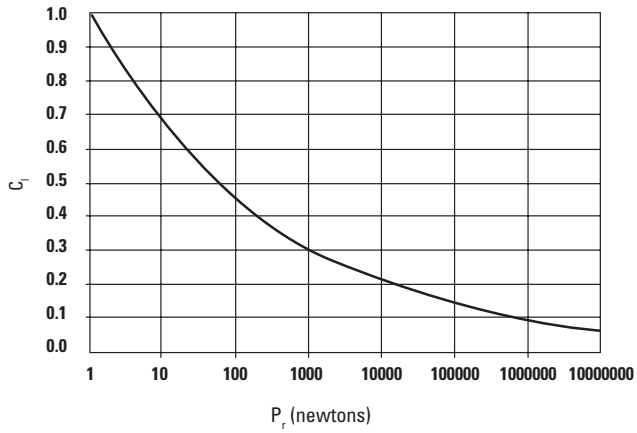

Fig. 16. Load factor for estimation of the lubricant-life adjustment.

VISCOSITY FACTOR (C_v)

The lubricant kinematic viscosity [centistokes (cSt)] is taken at the operating temperature of the bearing. The operating viscosity can be estimated by using Fig. 22 in the lubrication section. The viscosity factor (C_v) can then be determined from Fig. 18.

VISCOSITY FACTOR (C_v) VS. KINEMATIC VISCOSITY

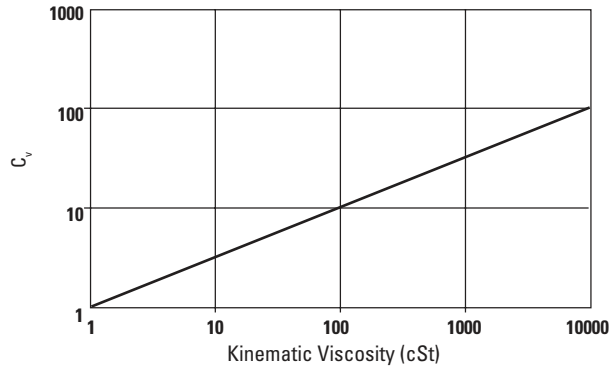

Fig. 18. Viscosity factor for estimation of the lubricant-life adjustment.

SPEED FACTOR (C_s)

C_s is determined from Fig. 17, where rev/min (RPM) is the rotational speed of the inner ring relative to the outer ring.

SPEED FACTOR (C_s) VS. ROTATIONAL SPEED

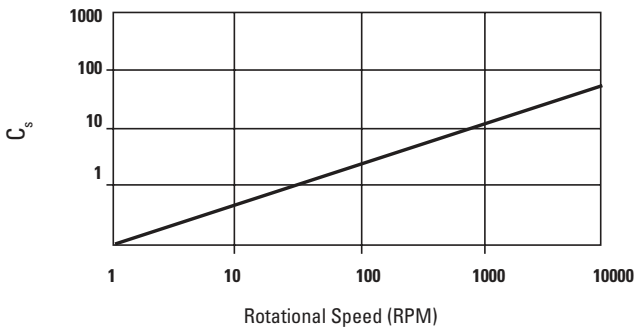

Fig. 17. Speed factor for estimation of the lubricant-life adjustment.

LOAD RATINGS, EQUIVALENT LOADS AND BEARING LIFE- *continued*

GREASE LUBRICATION FACTOR (C_{gr})

For grease lubrication, the EHL lubrication film becomes depleted of oil over time and is reduced in thickness. Consequently, a reduction factor (C_{gr}) should be used to adjust for this effect.

$C_{gr} = 0.79$

MISALIGNMENT LIFE FACTOR (a_{3m})

The effect of bearing life depends on the magnitude of the angle of misalignment, internal bearing geometry and the applied loads.

The misalignment life factor for spherical bearings is equal to one, $a_{3m}=1$, due to its self-aligning capabilities. The allowable misalignment in a spherical roller bearing is between 1 degree and 2.5 degrees, depending upon the series of the bearing as detailed in Table 7. Life will be reduced if these limits are exceeded due to roller-raceway contact truncation.

MAXIMUM PERMISSIBLE MISALIGNMENTS FOR SPHERICAL ROLLER BEARINGS BASED ON SERIES

Bearing Series	Maximum Misalignment
238	±1.0°
222, 230, 231, 239, 249	±1.5°
223, 240	±2.0°
232, 241	±2.5°

Table 7. Maximum permissible misalignments for spherical roller bearings based on series.

LOW-LOAD LIFE FACTOR (a_{3p})

Bearing life tests at the Timken Technology Center have shown greatly extended bearing fatigue life performance is achievable when the bearing contact stresses are low and the lubricant film is sufficient to fully separate the micro-scale textures of the contacting surfaces. Mating the test data with sophisticated computer programs for predicting bearing performance, Timken engineers have developed a low-load factor for use in the catalog to predict the life increase expected when operating under low bearing loads. Fig. 19 shows the low-load factor (a_{3p}) as a function of the lubricant life factor (a_{3l}) and the ratio of bearing dynamic rating to the bearing equivalent load.

LOW-LOAD LIFE ADJUSTMENT FACTOR FOR DYNAMIC RATINGS BASED ON 1X10⁶ REVOLUTIONS

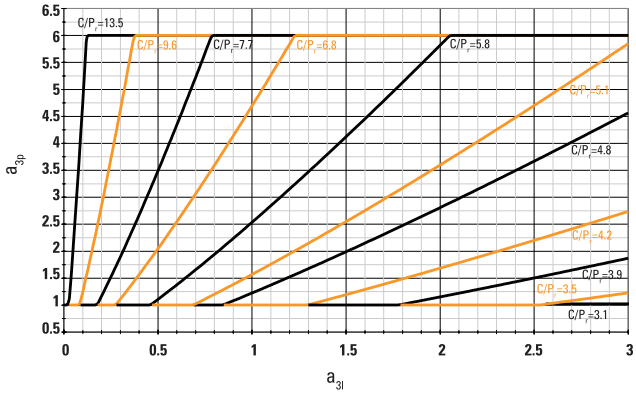

Fig. 19. Low-load life adjustment factor.

A

TOLERANCES

Depending on your specific application requirements, various degrees of bearing accuracy may be required.

Timken maintains close control of race contours and internal clearances, accuracy of cage construction, and unusually fine surface finishes. These standards, coupled with proprietary design, material and processing specifications, ensure that our bearings are designed for performance. Among the tolerance classes, Normal or otherwise referred to as P0 (RBEC 1) applies to spherical roller bearings for normal usage. The other classes, P6 and P5 (RBEC 3 and 5) apply to spherical roller bearings of increased precision as required. The values associated with the spherical roller bearing precision classes are listed in Tables 8 and 9.

STANDARD ISO TOLERANCES - INNER RING

All tolerances in number of micrometers (µm) and ten-thousandths inches (.0001")

Bearing Bore		Bore Numbers Reference	Bore Diameter Δdmp +0.000 mm +0.0000" To			Width Variation V_{Bs}			Radial Runout K_{ia}			Face Runout with Bore S_d	Axial Runout S_{ia}	Width Inner & Outer Rings ΔB_s & ΔC_s +0.000 mm +0.0000" To	
over	incl.		P0	P6	P5	P0	P6	P5	P0	P6	P5	P5	P5	P0,P6	P5
mm			µm in.	µm in.	µm in.	µm in.	µm in.	µm in.	µm in.	µm in.	µm in.	µm in.	µm in.	µm in.	µm in.
2.5	10	30-39	-8 -3	-7 -3	-5 -2	15 6	15 6	5 2	10 4	6 2.5	4 1.5	7 3	7 3	-120 -50	-40 -15
10	18	00-03	-8 -3	-7 -3	-5 -2	20 8	20 8	5 2	10 4	7 3	4 1.5	7 3	7 3	-120 -50	-80 -30
18	30	04-06	-10 -4	-8 -3	-6 -2.5	20 8	20 8	5 2	13 5	8 3	4 1.5	8 3	8 3	-120 -50	-120 -50
30	50	07-10	-12 -4.5	-10 -4	-8 -3	20 8	20 8	5 2	15 6	10 4	5 2	8 3	8 3	-120 -50	-120 -50
50	80	11-16	-15 -6	-12 -4.5	-9 -3.5	25 10	25 10	6 2.5	20 8	10 4	5 2	8 3	8 3	-150 -60	-150 -60
80	120	17-24	-20 -8	-15 -6	-10 -4	25 10	25 10	7 3	25 10	13 5	6 2.5	9 3.5	9 3.5	-200 -80	-200 -80
120	150	26-30	-25 -10	-18 -7	-13 -5	30 12	30 12	8 3	30 12	18 7	8 3	10 4	10 4	-250 -100	-250 -100
150	180	32-36	-25 -10	-18 -7	-13 -5	30 12	30 12	8 3	30 12	18 7	8 3	10 4	10 4	-250 -100	-250 -100
180	250	38-50	-30 -12	-22 -8.5	-15 -6	30 12	30 12	10 4	40 16	20 8	10 4	11 4.5	13 5	-300 -120	-300 -120
250	315	52-60	-35 -14	-25 -10	-18 -7	35 14	35 14	13 5	50 20	25 10	13 5	13 5	15 6	-350 -140	-350 -140
315	400	64-80	-40 -16	-30 -12	-23 -9	40 16	40 16	15 6	60 24	30 12	15 6	15 6	20 8	-400 -160	-400 -160
400	500		-45 -18	-35 -14	— —	50 20	45 18	— —	65 26	35 14	— —	— —	— —	-450 -180	— —
500	630		-50 -20	-40 -16	— —	60 24	50 20	— —	70 28	40 16	— —	— —	— —	-500 -200	— —
630	800		-75 -30	— —	— —	70 28	— —	— —	80 31	— —	— —	— —	— —	-750 -300	— —

Table 8. Standard tolerances for spherical roller bearing inner rings.

The tolerances in this table are in conformance with ISO492:2002.

ISO Symbols - Inner Ring

Δdmp Single plane mean bore diameter deviation from basic bore diameter. For a basically tapered bore, Δdmp refers only to the theoretical small bore end of the bore

K_{ia} Radial runout of assembled bearing inner ring, with respect to outer ring

V_{Bs} Inner ring width variation

S_d Inner ring face runout with respect to bore

S_{ia} Axial runout of assembled bearing inner ring, with respect to outer ring

ΔB_s Single inner ring width deviation from basic, e.g., width tolerance

ISO Symbols - Outer Ring

ΔDmp Single plane mean outside diameter deviation from basic outside diameter, e.g., O.D. tolerance

K_{ea} Radial runout of assembled bearing outer ring, with respect to inner ring

V_{Cs} Outer ring width variation

S_D Outer ring face runout with respect to outer diameter

S_{ea} Axial runout of assembled bearing outer ring, with respect to inner ring

ΔC_s Outer ring width deviation from basic, e.g., width tolerance

TOLERANCES - *continued*

STANDARD ISO TOLERANCES - OUTER RING											
All tolerances in number of micrometers (µm) and ten-thousandths inches (.0001")											
Bearing O.D.		Outside Diameter ΔDmp +0.000 mm To +0.0000"			Width Variation V_{Cs}		Radial Runout K_{ea}			Axial Runout S_{ea}	Outside Diameter Runout With Face S_D
over	incl.	P0	P6	P5	P0, P6	P5	P0	P6	P5	P5	P5
mm		µm in.	µm in.	µm in.	µm in.	µm in.	µm in.	µm in.	µm in.	µm in.	µm in.
0	18	-8 -3	-7 -3	-5 -2	15 6	5 2	15 6	8 4	5 2	8 3	8 3
18	30	-9 -3.5	-8 -3	-6 -2.5	20 8	5 2	15 6	9 4	6 2.5	8 3	8 3
30	50	-11 -4.5	-9 -3.5	-7 -3	20 8	5 2	20 8	10 4	7 3	8 3	8 3
50	80	-13 -5	-11 -4.5	-9 -3.5	25 10	6 2.5	25 10	13 5	8 3	10 4	8 3
80	120	-15 -6	-13 -5	-10 -4	25 10	8 3	35 14	18 7	10 4	11 4.5	9 3.5
120	150	-18 -7	-15 -6	-11 -4.5	30 12	8 3	40 16	20 8	11 4.5	13 5	10 4
150	180	-25 -10	-18 -7	-13 -5	30 12	8 3	45 18	23 9	13 5	14 5.5	10 4
180	250	-30 -12	-20 -8	-15 -6	30 12	10 4	50 20	25 10	15 6	15 6	11 4.5
250	315	-35 -14	-25 -10	-18 -7	35 14	11 4.5	60 24	30 12	18 7	18 7	13 5
315	400	-40 -16	-28 -11	-20 -8	40 16	13 5	70 28	35 14	20 8	20 8	13 5
400	500	-45 -18	-33 -13	-23 -9	45 18	15 6	80 31	40 16	23 9	23 9	15 6
500	630	-50 -20	-38 -15	-28 -11	50 20	18 7	100 39	50 20	25 10	25 10	18 7
630	800	-75 -30	-45 -18	-35 -14	— —	20 8	120 47	60 24	30 12	30 12	20 8
800	1000	-100 -40	-60 -24	— —	— —	— —	140 55	75 30	— —	— —	— —
1000	1250	-125 -50	— —	— —	— —	— —	160 63	— —	— —	— —	— —

Table 9. Standard tolerances for spherical roller bearing outer rings.

The tolerances in this table are in conformance with ISO 492:2002.

A

SHAFT AND TOLERANCE FITS

The following tables provide standard ISO tolerance information. They are provided for general use and are referenced throughout this catalog.

Bearing Bore			g6			h6			h5			j5		
Nominal (Max.)		Tolerance .000 mm .0000 in. To	Shaft Dia.		Fit	Shaft Dia.		Fit	Shaft Dia.		Fit	Shaft Dia.		Fit
Over	Incl.		Max.	Min.		Max.	Min.		Max.	Min.		Max.	Min.	
mm		mm in.	mm in.			mm in.			mm in.			mm in.		
3	6	-0.008 -0.0003	-0.004 -0.0002	-0.012 -0.0005	0.012L 0.004T 0.0005L 0.0001T	0.000 0.0000	-0.008 -0.0003	0.008L 0.008T 0.0003L 0.0003T	0.000 0.0000	-0.005 -0.0002	0.005L 0.008T 0.0002L 0.0003T	+0.003 +0.0001	-0.002 -0.0001	0.002L 0.011T 0.0001L 0.0004T
6	10	-0.008 -0.0003	-0.005 -0.0002	-0.014 -0.0006	0.014L 0.003T 0.0006L 0.0001T	0.000 0.0000	-0.009 -0.0004	0.009L 0.008T 0.0004L 0.0003T	0.000 0.0000	-0.006 -0.0002	0.006L 0.008T 0.0002L 0.0003T	+0.002 +0.0004	-0.002 -0.0001	0.002L 0.012T 0.0001L 0.0005T
10	18	-0.008 -0.0003	-0.006 -0.0002	-0.017 -0.0007	0.017L 0.002T 0.0007L 0.0001T	0.000 0.0000	-0.011 -0.0004	0.011L 0.008T 0.0004L 0.0003T	0.000 0.0000	-0.008 -0.0003	0.008L 0.008T 0.0003L 0.0003T	+0.005 +0.0002	-0.003 -0.0001	0.003L 0.013T 0.0001L 0.0005T
18	30	-0.010 -0.0004	-0.007 -0.0003	-0.020 -0.0008	0.020L 0.003T 0.0008L 0.0001T	0.000 0.0000	-0.013 -0.0005	0.013L 0.010T 0.0005L 0.0004T	— —	— —	— —	+0.005 +0.0002	-0.004 -0.0002	0.004L 0.015T 0.0002L 0.0006T
30	50	-0.012 -0.00045	-0.009 -0.0004	-0.025 -0.0010	0.025L 0.003T 0.0010L 0.00005T	0.000 0.0000	-0.016 -0.0006	0.016L 0.012T 0.0006L 0.00045T	— —	— —	— —	+0.006 +0.0002	-0.005 -0.0002	0.005L 0.018T 0.0002L 0.00065T
50	80	-0.015 -0.0006	-0.010 -0.0004	-0.029 -0.0011	0.029L 0.005T 0.0011L 0.0002T	0.000 0.0000	-0.019 -0.0007	0.019L 0.015T 0.0007L 0.0006T	— —	— —	— —	+0.006 +0.0002	-0.007 -0.0003	0.007L 0.021T 0.0003L 0.0008T
80	120	-0.020 -0.0008	-0.012 -0.0005	-0.034 -0.0013	0.034L 0.008T 0.0013L 0.0003T	0.000 0.0000	-0.022 -0.0009	0.022L 0.020T 0.0009L 0.0008T	— —	— —	— —	+0.006 +.0002	-0.009 -0.0004	0.009L 0.026T 0.0004L 0.0010T
120	180	-0.025 -0.0010	-0.014 -0.0006	-0.039 -0.0015	0.039L 0.011T 0.0015L 0.0004T	0.000 0.0000	-0.025 -0.0010	0.025L 0.025T 0.0010L 0.0010T	— —	— —	— —	+0.007 +0.0003	-0.011 -0.0004	0.011L 0.032T 0.0004L 0.0013T
180	200	-0.030 -0.0012	-0.015 -0.0006	-0.044 -0.0017	0.044L 0.015T 0.0017L 0.0006T	0.000 0.0000	-0.029 -0.0011	0.029L 0.030T 0.0011L 0.0012T	— —	— —	— —	+0.007 +0.0003	-0.013 -0.0005	0.013L 0.037T 0.0005L 0.0015T
200	225	-0.030 -0.0012	-0.015 -0.0006	-0.044 -0.0017	0.044L 0.015T 0.0017L 0.0006T	0.000 0.0000	-0.029 -0.0011	0.029L 0.030T 0.0011L 0.0012T	— —	— —	— —	+0.007 +0.0003	-0.013 -0.0005	0.013L 0.037T 0.0005L 0.0015T
225	250	-0.030 -0.0012	-0.015 -0.0006	-0.044 -0.0017	0.044L 0.015T 0.0017L 0.0006T	0.000 0.0000	-0.029 -0.0011	0.029L 0.030T 0.0011L 0.0012T	— —	— —	— —	+0.007 +0.0003	-0.013 -0.0005	0.013L 0.037T 0.0005L 0.0015T
250	280	-0.035 -0.0014	-0.017 -0.0007	-0.049 -0.0019	0.049L 0.018T 0.0019L 0.0007T	0.000 0.0000	-0.032 -0.0013	0.032L 0.035T 0.0013L 0.0014T	— —	— —	— —	+0.007 +0.0003	-0.016 -0.0006	0.016L 0.042T 0.0006L 0.0017T
280	315	-0.035 -0.0014	-0.017 -0.0007	-0.049 -0.0019	0.049L 0.018T 0.0019L 0.0007T	0.000 0.0000	-0.032 -0.0013	0.032L 0.035T 0.0013L 0.0014T	— —	— —	— —	+0.007 +0.0003	-0.016 -0.0006	0.016L 0.042T 0.0006L 0.0017T

The tolerances in this table are in conformance with ANSIABMA Standard 7-1988.

SHAFT AND TOLERANCE FITS - *continued*

Bearing Bore			j6			k5			k6			m5		
Nominal (Max.)		Tolerance .000 mm .0000 in. To	Shaft Dia.		Fit	Shaft Dia.		Fit	Shaft Dia.		Fit	Shaft Dia.		Fit
Over	Incl.		Max.	Min.		Max.	Min.		Max.	Min.		Max.	Min.	
mm		**mm** in.	**mm** in.			**mm** in.			**mm** in.			**mm** in.		
3	**6**	**-0.008** -0.0003	**+0.006** +0.0002	**-0.002** -0.0001	**0.002L** **0.014T** 0.0001L 0.0005T	**+0.006** +0.0002	**+0.001** +0.0000	**0.001T** **0.014T** 0.0000T 0.0005T	— —	— —	— —	**+0.009** +0.0004	**+0.004** +0.0002	**0.004T** **0.017T** 0.0002T 0.0007T
6	**10**	**-0.008** -0.0003	**+0.007** +0.003	**-0.002** -0.0001	**0.002L** **0.015T** 0.0001L 0.0006T	**+0.007** +0.0003	**+0.001** +0.0000	**0.001T** **0.015T** 0.0000T 0.0006T	— —	— —	— —	**+0.012** +0.0005	**+0.006** +0.0002	**0.006T** **0.020T** 0.0002T 0.0008T
10	**18**	**-0.008** -0.0003	**+0.008** +0.0003	**-0.003** -0.0001	**0.003L** **0.016T** 0.0001L 0.0006T	**+0.009** +0.0004	**+0.001** +0.0000	**0.001T** **0.017T** 0.0000T 0.0007T	— —	— —	— —	**+0.015** +0.0006	**+0.007** +0.0003	**0.007T** **0.023T** 0.0003T 0.0009T
18	**30**	**-0.010** -0.0004	**+0.009** +0.004	**-0.004** -0.0002	**0.004L** **0.019T** 0.0002L 0.0008T	**+0.011** +0.0004	**+0.002** +0.0001	**0.002T** **0.021T** 0.0001T 0.0008T	— —	— —	— —	**+0.017** +0.0007	**+0.008** +0.0003	**0.008T** **0.027T** 0.0003T 0.0011T
30	**50**	**-0.012** -0.00045	**+0.011** +0.0004	**-0.005** -0.0002	**0.005L** **0.023T** 0.0002L 0.00085T	**+0.013** +0.0005	**+0.002** +0.0001	**0.002T** **0.021T** 0.0001T 0.0008T	**+0.018** +0.0007	**+0.002** +0.0001	**0.002T** **0.030T** 0.0001T 0.00115T	**+0.020** +0.0008	**+0.009** +0.0004	**0.009T** **0.032T** 0.0004T 0.00125T
50	**80**	**-0.015** -0.0006	**+0.012** +0.0005	**-0.007** -0.0003	**0.007L** **0.027T** 0.0003L 0.0011T	**+0.15** +0.0006	**+0.002** +0.0001	**0.002T** **0.030T** 0.0001T 0.0012T	**+0.021** +0.0008	**+0.002** +0.0001	**0.002T** **0.036T** 0.0001T 0.0014T	**+0.024** +0.0009	**+0.011** +0.0004	**0.011T** **0.039T** 0.0004T 0.0015T
80	**120**	**-0.020** -0.0008	**+0.013** +0.005	**-0.009** -0.0004	**0.009L** **0.033T** 0.0004L 0.0013T	**+0.018** +0.0007	**+0.003** +0.0001	**0.003T** **0.038T** 0.0001T 0.0015T	**+0.025** +0.0010	**+0.003** +0.0001	**0.003T** **0.045T** 0.0001T 0.0018T	**+0.028** +0.0011	**+0.013** +0.0005	**0.013T** **0.048T** 0.0005T 0.0019T
120	**180**	**-0.025** -0.0010	**+0.014** +0.0006	**-0.011** -0.004	**0.011L** **0.039T** 0.0004L 0.0016T	**+0.021** +0.0008	**+0.003** +0.0001	**0.003T** **0.046T** 0.0001T 0.0018T	**+0.028** +0.0011	**+0.003** +0.0001	**0.003T** **0.053T** 0.0001T 0.0021T	**+0.033** +0.0013	**+0.015** +0.0006	**0.015T** **0.058T** 0.0006T 0.0023T
180	**200**	**-0.030** -0.0012	**+0.016** +.00006	**-0.013** -0.0005	**0.013L** **0.046T** 0.0005L 0.0018T	**+0.024** +0.0009	**+0.004** +0.0002	**0.003T** **0.046T** 0.0001T 0.0018T	— —	— —	— —	**+0.037** +0.0015	**+0.017** +0.0007	**0.017T** **0.067T** 0.0007T 0.0027T
200	**225**	**-0.030** -0.0012	**+0.016** +.00006	**-0.013** -0.0005	**0.013L** **0.046T** 0.0005L 0.0018T	**+0.024** +0.0009	**+0.004** +0.0002	**0.003T** **0.046T** 0.0001T 0.0018T	— —	— —	— —	**+0.037** +0.0015	**+0.017** +0.0007	**0.017T** **0.067T** 0.0007T 0.0027T
225	**250**	**-0.030** -0.0012	**+0.016** +.00006	**-0.013** -0.0005	**0.013L** **0.046T** 0.0005L 0.0018T	**+0.024** +0.0009	**+0.004** +0.0002	**0.003T** **0.046T** 0.0001T 0.0018T	— —	— —	— —	**+0.037** +0.0015	**+0.017** +0.0007	**0.017T** **0.067T** 0.0007T 0.0027T
250	**280**	**-0.035** -0.0014	**+0.016** +.00006	**-0.016** -0.0006	**0.016L** **0.051T** 0.0006L 0.0020T	**+0.027** +0.0011	**+0.004** +0.0002	**0.004T** **0.062T** 0.0002T 0.0025T	— —	— —	— —	**+0.043** +0.0017	**+0.020** +0.0008	**0.020T** **0.078T** 0.0008T 0.0031T
280	**315**	**-0.035** -0.0014	**+0.016** +.00006	**-0.016** -0.0006	**0.016L** **0.051T** 0.0006L 0.0020T	**+0.027** +0.0011	**+0.004** +0.0002	**0.004T** **0.062T** 0.0002T 0.0025T	— —	— —	— —	**+0.043** +0.0017	**+0.020** +0.0008	**0.020T** **0.078T** 0.0008T 0.0031T

A

SHAFT AND TOLERANCE FITS - *continued*

Bearing Bore			g6			h6			j5		
Nominal (Max.)		Tolerance .000 mm .0000 in. To	Shaft Dia.		Fit	Shaft Dia.		Fit	Shaft Dia.		Fit
Over	Incl.		Max.	Min.		Max.	Min.		Max.	Min.	
mm		mm in.	mm in.			mm in.			mm in.		
315	355	-0.040 -0.0016	-0.018 -0.0007	-0.054 -0.0021	0.054L 0.022T 0.0021L 0.0009T	0.000 0.0000	-0.036 -0.0014	0.036L 0.040T 0.0014L 0.0016T	+0.007 +0.0003	-0.018 -0.0007	0.018L 0.047T 0.0007L 0.0019T
355	400	-0.040 -0.0016	-0.018 -0.0007	-0.054 -0.0021	0.054L 0.022T 0.0021L 0.0009T	0.000 0.0000	-0.036 -0.0014	0.036L 0.040T 0.0014L 0.0016T	+0.007 +0.0003	-0.018 -0.0007	0.018L 0.047T 0.0007L 0.0019T
400	450	-0.045 -0.0018	-0.020 -0.0008	-0.060 -0.0024	0.060L 0.025T 0.0024L 0.0010T	0.000 0.0000	-0.040 -0.0016	0.040L 0.045T 0.0016L 0.0018T	+0.007 +0.0003	-0.020 -0.0008	0.020L 0.052T 0.0008L 0.0021T
450	500	-0.045 -0.0018	-0.020 -0.0008	-0.060 -0.0024	0.060L 0.025T 0.0024L 0.0010T	0.000 0.0000	-0.040 -0.0016	0.040L 0.045T 0.0016L 0.0018T	+0.007 +0.0003	-0.020 -0.0008	0.020L 0.065T 0.0008L 0.0021T
500	560	-0.050 -0.0020	-0.022 -0.0009	-0.066 -0.0026	0.066L 0.028T 0.0026L 0.0011T	0.000 0.0000	-0.044 -0.0017	0.044L 0.050T 0.0017L 0.0020T	+0.008 +0.0003	-0.022 -0.0009	0.022L 0.058T 0.0009L 0.0023T
560	630	-0.050 -0.0020	-0.022 -0.0009	-0.066 -0.0026	0.066L 0.028T 0.0026L 0.0011T	0.000 0.0000	-0.044 -0.0017	0.044L 0.050T 0.0017L 0.0020T	+0.008 +0.0003	-0.022 -0.0009	0.022L 0.058T 0.0009L 0.0023T
630	710	-0.075 -0.0030	-0.024 -0.0009	-0.074 -0.0029	0.074L 0.051T 0.0029L 0.0021T	0.000 0.0000	-0.050 -0.0020	0.050L 0.075T 0.0020L 0.0030T	+0.010 +0.0004	-0.025 -0.0010	0.25L 0.85T 0.0010L 0.0034T
710	800	-0.075 -0.0030	-0.024 -0.0009	-0.074 -0.0029	0.074L 0.051T 0.0029L 0.0021T	0.000 0.0000	-0.050 -0.0020	0.050L 0.075T 0.0020L 0.0030T	+0.010 +0.0004	-0.025 -0.0010	0.025L 0.085T 0.0010L 0.0034T
800	900	-0.100 -0.0039	-0.026 -0.0010	-0.082 -0.0032	0.082L 0.074T 0.0032L 0.0029T	0.000 0.0000	-0.056 -0.0022	0.056L 0.100T 0.0022L 0.0039T	+0.012 +0.0005	-0.028 -0.0011	0.028L 0.112T 0.0011L 0.0044T
900	1000	-0.100 -0.0039	-0.026 -0.0010	-0.082 -0.0032	0.082L 0.074T 0.0032L 0.0029T	0.000 0.0000	-0.056 -0.0022	0.056L 0.100T 0.0022L 0.0039T	+0.012 +0.0005	-0.028 -0.0011	0.028L 0.112T 0.0011L 0.0044T
1000	1120	-0.125 -0.0049	-0.028 -0.0011	-0.094 -0.0037	0.094L 0.097T 0.0037L 0.0038T	0.000 0.0000	-0.066 -0.0026	0.066L 0.125T 0.0022L 0.0039T	+0.013 +0.0005	-0.033 -0.0013	0.033L 0.138T 0.0013L 0.0054T
1120	1250	-0.125 -0.0049	-0.028 -0.0011	-0.094 -0.0037	0.094L 0.097T 0.0037L 0.0038T	0.000 0.0000	-0.066 -0.0026	0.066L 0.125T 0.0022L 0.0039T	+0.013 +0.0005	-0.033 -0.0013	0.033L 0.138T 0.0013L 0.0054T

The tolerances in this table are in conformance with ANSIABMA Standard 7-1988.

SHAFT AND TOLERANCE FITS - *continued*

Bearing Bore			j6			k5			m5		
Nominal (Max.)		Tolerance **.000 mm** .0000 in. To	Shaft Dia.		Fit	Shaft Dia.		Fit	Shaft Dia.		Fit
Over	Incl.		Max.	Min.		Max.	Min.		Max.	Min.	
mm		**mm** in.	**mm** in.			**mm** in.			**mm** in.		
315	**355**	**-0.040** -0.0016	**+0.018** +0.0007	**-0.018** -0.0007	**0.018L** **0.058T** 0.0007L 0.0023T	**+0.029** +0.0011	**+0.046** +0.0002	**0.004T** **0.009T** 0.0002T 0.0027T	**+0.046** +0.0018	**+0.021** +0.0008	**0.021T** **0.086T** 0.0008T 0.0034T
355	**400**	**-0.040** -0.0016	**+0.018** +0.0007	**-0.018** -0.0007	**0.018L** **0.058T** 0.0007L 0.0023T	**+0.029** +0.0011	**+0.004** +0.0002	**0.004T** **0.009T** 0.0002T 0.0027T	**+0.046** +0.0018	**+0.021** +0.0008	**0.021T** **0.086T** 0.0008T 0.0034T
400	**450**	**-0.045** -0.0018	**+0.020** +0.0008	**-0.020** -0.0008	**0.020L** **0.065T** 0.0008L 0.0026T	**+0.032** +0.0013	**+0.005** +0.0002	**0.005T** **0.077T** 0.0002T 0.0031T	**+0.050** +0.0020	**+0.023** +0.0009	**0.021T** **0.086T** 0.0009T 0.0038T
450	**500**	**-0.045** -0.0018	**+0.020** +0.0008	**-0.020** -0.0008	**0.020L** **0.065T** 0.0008L 0.0026T	**+0.032** +0.0013	**+0.005** +0.0002	**0.005T** **0.077T** 0.0002T 0.0031T	**+0.050** +0.0020	**+0.023** +0.0009	**0.021T** **0.086T** 0.0009T 0.0038T
500	**560**	**-0.050** -0.0020	**+0.022** +0.0009	**-0.022** -0.0009	**0.022L** **0.072T** 0.0009L 0.0029T	**+0.030** +0.0012	**0.000** 0.0000	**0.000T** **0.080T** 0.0000T 0.0032T	**+0.056** +0.0022	**+0.026** +0.0010	**0.026T** **0.106T** 0.0010T 0.0042T
560	**630**	**-0.050** -0.0020	**+0.022** +0.0009	**-0.022** -0.0009	**0.022L** **0.072T** 0.0009L 0.0029T	**+0.030** +0.0012	**0.000** 0.0000	**0.000T** **0.080T** 0.0000T 0.0032T	**+0.056** +0.0022	**+0.026** +0.0010	**0.026T** **0.106T** 0.0010T 0.0042T
630	**710**	**-0.075** -0.0030	**+0.025** +0.0010	**-0.025** -0.0010	**0.025L** **0.100T** 0.0010L 0.0040T	**+0.035** +0.0014	**0.000** 0.0000	**0.000T** **0.110T** 0.0000T 0.0044T	**+0.028** +0.0026	**+0.013** +0.0012	**0.030T** **0.140T** 0.0012T 0.0056T
710	**800**	**-0.075** -0.0030	**+0.025** +0.0010	**-0.025** -0.0010	**0.025L** **0.100T** 0.0010L 0.0040T	**+0.035** +0.0014	**0.000** 0.0000	**0.000T** **0.110T** 0.0000T 0.0044T	**+0.028** +0.0026	**+0.013** +0.0012	**0.030T** **0.140T** 0.0012T 0.0056T
800	**900**	**-0.100** -0.0039	**+0.025** +0.0010	**-0.025** -0.0010	**0.025L** **0.100T** 0.0010L 0.0040T	**+0.035** +0.0014	**0.000** 0.0000	**0.000T** **0.110T** 0.0000T 0.0044T	**+0.028** +0.0026	**+0.013** +0.0012	**0.030T** **0.140T** 0.0012T 0.0056T
900	**1000**	**-0.100** -0.0039	**+0.028** +0.0011	**-0.028** -0.0011	**0.028L** **0.128T** 0.0011L 0.0050T	**+0.040** +0.0016	**0.000** 0.0000	**0.000T** **0.140T** 0.0000T 0.0055T	**+0.074** +0.0029	**+0.034** +0.0013	**0.034T** **0.174T** 0.0013T 0.0068T
1000	**1120**	**-0.125** -0.0049	**+0.028** +0.0011	**-0.028** -0.0011	**0.013L** **0.046T** 0.0005L 0.0018T	**+0.040** +0.0016	**0.000** 0.0000	**0.003T** **0.046T** 0.0001T 0.0018T	**+0.074** +0.0029	**+0.034** +0.0013	**0.34T** **0.174T** 0.0013T 0.0068T
1120	**1250**	**-0.125** -0.0049	**+0.033** +0.0013	**-0.033** -0.0013	**0.033L** **0.158T** 0.0013L 0.0054T	**+0.046** +0.0018	**0.000** 0.0000	**0.000T** **0.171T** 0.0000T 0.0067T	**+0.086** +0.0034	**+0.040** +0.0016	**0.040T** **0.211T** 0.0016T 0.0083T

A

SHAFT AND TOLERANCE FITS - *continued*

Bearing Bore			m6			n6			p6			r6			r7		
Nominal (Max.)		Tolerance .000 mm .0000 in.	Shaft Dia.		Fit	Shaft Dia.		Fit	Shaft Dia.		Fit	Shaft Dia.		Fit	Shaft Dia.		Fit
Over	Incl.	To	Max.	Min.		Max.	Min.		Max.	Min.		Max.	Min.		Max.	Min.	
mm		mm in.	mm in.			mm in.			mm in.			mm in.			mm in.		
3	6	-0.008 -0.0003	— —	— —	— —	— —	— —	— —	— —	— —	— —	— —	— —	— —	— —	— —	— —
6	10	-0.008 -0.0003	— —	— —	— —	— —	— —	— —	— —	— —	— —	— —	— —	— —	— —	— —	— —
10	18	-0.008 -0.0003	— —	— —	— —	— —	— —	— —	— —	— —	— —	— —	— —	— —	— —	— —	— —
18	30	-0.010 -0.0004	— —	— —	— —	— —	— —	— —	— —	— —	— —	— —	— —	— —	— —	— —	— —
30	50	-0.012 -0.0005	+0.025 +0.0010	+0.009 +0.0004	0.009T 0.037T 0.0004T 0.0145T	— —	— —	— —	— —	— —	— —	— —	— —	— —	— —	— —	— —
50	80	-0.015 -0.0006	+0.030 +0.0012	+0.011 +0.0004	0.011T 0.045T 0.0004T 0.0018T	+0.039 +0.0015	+0.020 +0.0008	0.020T 0.054T 0.0008T 0.0021T	— —	— —	— —	— —	— —	— —	— —	— —	— —
80	120	-0.020 -0.0008	+0.035 +0.0014	+0.013 +0.0005	0.013T 0.055T 0.0005T 0.0022T	+0.045 +0.0018	+0.023 +0.0009	0.023T 0.065T 0.0009T 0.0026T	+0.059 +0.0023	+0.037 +0.0015	0.037T 0.079T 0.0015T 0.0031T	— —	— —	— —	— —	— —	— —
120	180	-0.025 -0.0010	+0.040 +0.0016	+0.015 +0.0006	0.015T 0.065T 0.0006T 0.0026T	+0.052 +0.0020	+0.027 +0.0011	0.027T 0.077T 0.0011T 0.0030T	+0.068 +0.0027	+0.043 +0.0017	0.043T 0.093T 0.0017T 0.0037T	+0.090 +0.0035	-0.065 +0.0026	0.065T 0.115T 0.0026T 0.0045T	— —	— —	— —
180	200	-0.030 -0.0012	+0.046 +0.0018	+0.017 +0.0007	0.017T 0.076T 0.0007T 0.0030T	+0.060 +0.0024	+0.031 +0.0012	0.031L 0.090T 0.0012L 0.0036T	+0.079 +0.0031	+0.050 +0.0020	0.050T 0.109T 0.0020T 0.0043T	+0.106 +0.0042	+0.077 +0.0030	0.077T 0.136T 0.0030T 0.0054T	— —	— —	— —
200	225	-0.030 -0.0012	+0.046 +0.0018	+0.017 +0.0007	0.017T 0.076T 0.0007T 0.0030T	+0.060 +0.0024	+0.031 +0.0012	0.031L 0.090T 0.0012L 0.0036T	+0.079 +0.0031	+0.050 +0.0020	0.050T 0.109T 0.0020T 0.0043T	+0.109 +0.0043	+0.080 +0.0031	0.080T 0.139T 0.0031T 0.0055T	+0.126 +0.0050	+0.080 +0.0031	0.080T 0.156T 0.0031T 0.0062T
225	250	-0.030 -0.0012	+0.046 +0.0018	+0.017 +0.0007	0.017T 0.076T 0.0007T 0.0030T	+0.060 +0.0024	+0.031 +0.0012	0.031L 0.090T 0.0012L 0.0036T	+0.079 +0.0031	+0.050 +0.0020	0.050T 0.109T 0.0020T 0.0043T	+0.113 +0.0044	+0.084 +0.0033	0.084T 0.143T 0.0033T 0.0056T	+0.130 +0.0051	+0.084 +0.0033	0.084T 0.160T 0.0033T 0.0063T
250	280	-0.035 -0.0014	+0.052 +0.0020	+0.020 +0.0008	0.020T 0.087T 0.0008T 0.0034T	+0.066 +0.0026	+0.034 +0.0013	0.034T 0.101T 0.0013T 0.0040T	+0.088 +0.0035	+0.056 +0.0022	0.0056T 0.123T 0.0022T 0.0049T	+0.126 +0.0050	+0.094 +0.0037	0.094T 0.161T 0.0037T 0.0064T	+0.146 +0.0057	+0.094 +0.0037	0.094T 0.181T 0.0037T 0.0071T
280	315	-0.035 -0.0014	+0.052 +0.0020	+0.020 +0.0008	0.020T 0.087T 0.0008T 0.0034T	+0.066 +0.0026	+0.034 +0.0013	0.034T 0.101T 0.0013T 0.0040T	+0.088 +0.0035	+0.056 +0.0022	0.056T 0.123T 0.0022T 0.0049T	+0.130 +0.0051	+0.098 +0.0039	0.098T 0.165T 0.0039T 0.0065T	+0.150 +0.0059	+0.098 +0.0039	0.098T 0.185T 0.0039T 0.0073T

The tolerances in this table are in conformance with ANSIABMA Standard 7-1988.

SHAFT AND TOLERANCE FITS - *continued*

Bearing Bore			m6			n6			p6			r6			r7		
Nominal (Max.)		Tolerance .000 mm .0000 in.	Shaft Dia.		Fit	Shaft Dia.		Fit	Shaft Dia.		Fit	Shaft Dia.		Fit	Shaft Dia.		Fit
Over	Incl.	To	Max.	Min.		Max.	Min.		Max.	Min.		Max.	Min.		Max.	Min.	
mm		mm in.	mm in.			mm in.			mm in.			mm in.			mm in.		
315	355	-0.040 -0.0016	+0.057	+0.021 +0.0008	0.021T 0.097T 0.0008T 0.0038T	+0.073 +0.0029	+0.037 +0.0015	0.037T 0.113T 0.0015T 0.0045T	+0.098 +0.0039	+0.062 +0.0024	0.062T 0.138T 0.0024T 0.0055T	+0.144 +0.0057	+0.108 +0.0043	0.108T 0.184T 0.0043T 0.0073T	+0.165 +0.0065	+0.108 +0.0043	0.108T 0.205T 0.0043T 0.0081T
355	400	-0.040 -0.0016	— —	— —	— —	+0.073 +0.0029	+0.037 +0.0015	0.037T 0.113T 0.0015T 0.0045T	+0.098 +0.0039	+0.062 +0.0024	0.062T 0.138T 0.0024T 0.0055T	+0.150 +0.0059	+0.114 +0.0045	0.114T 0.190T 0.0045T 0.0075T	+0.171 +0.0067	+0.114 +0.0045	0.114T 0.211T 0.0045T 0.0083T
400	450	-0.045 -0.0018	— —	— —	— —	+0.080 +0.0031	+0.040 +0.0016	0.040T 0.125T 0.0016T 0.0049T	+0.108 +0.0043	+0.068 +0.0027	0.068T 0.153T 0.0027T 0.0061T	+0.166 +0.0065	+0.126 +0.0050	0.126T 0.211T 0.0050T 0.0083T	+0.189 +0.0074	+0.126 +0.0050	0.126T 0.234T 0.0050T 0.0092T
450	500	-0.045 -0.0018	— —	— —	— —	+0.080 +0.0031	+0.040 +0.0016	0.040T 0.125T 0.0016T 0.0049T	+0.108 +0.0043	+0.068 +0.0027	0.068T 0.153T 0.0027T 0.0061T	+0.172 +0.0068	+0.132 +0.0052	0.132T 0.217T 0.0052T 0.0086T	+0.195 +0.0077	+0.132 +0.0052	0.132T 0.240T 0.0052T 0.0095T
500	560	-0.050 -0.0020	— —	— —	— —	— —	— —	— —	+0.122 +0.0048	+0.078 +0.0031	0.078T 0.172T 0.0031T 0.0068T	+0.194 +0.0076	+0.150 +0.0059	0.150T 0.244T 0.0059T 0.0096T	+0.220 +0.0087	+0.150 +0.0059	0.150T 0.270T 0.0059T 0.0107T
560	630	-0.050 -0.0020	— —	— —	— —	— —	— —	— —	+0.122 +0.0048	+0.078 +0.0031	0.078T 0.172T 0.0031T 0.0068T	+0.199 +0.0078	+0.155 +0.0061	0.155T 0.249T 0.0061T 0.0098T	+0.225 +0.0089	+0.155 +0.0061	0.155T 0.275T 0.0061T 0.0109T
630	710	-0.075 -0.0030	— —	— —	— —	— —	— —	— —	+0.138 +0.0054	+0.088 +0.0035	0.088T 0.213T 0.0035T 0.0084T	+0.225 +0.0089	+0.175 +0.0069	0.175T 0.300T 0.0069T 0.0119T	+0.255 +0.0100	+0.175 +0.0069	0.175T 0.330T 0.0069T 0.0130T
710	800	-0.075 -0.0030	— —	— —	— —	— —	— —	— —	+0.138 +0.0054	+0.088 +0.0035	0.088T 0.213T 0.0035T 0.0084T	+0.235 +0.0093	+0.185 +0.0073	0.185T 0.310T 0.0073T 0.0123T	+0.265 +0.0104	+0.185 +0.0073	0.185T 0.340T 0.0073T 0.0134T
800	900	-0.100 -0.0039	— —	— —	— —	— —	— —	— —	+0.156 +0.0061	+0.100 +0.0039	0.100T 0.256T 0.0039T 0.0100T	+0.266 +0.0105	+0.210 +0.0083	0.210T 0.366T 0.0083T 0.0144T	+0.300 +0.0118	+0.210 +0.0083	0.210T 0.400T 0.0083T 0.0157T
900	1000	-0.100 -0.0039	— —	— —	— —	— —	— —	— —	+0.156 +0.0061	+0.100 +0.0039	0.100T 0.256T 0.0039T 0.0100T	+0.276 +0.0109	+0.220 +0.0087	0.220T 0.376T 0.0087T 0.0148T	+0.310 +0.0122	+0.220 +0.0087	0.220T 0.410T 0.0087T 0.0161T
1000	1120	-0.125 -0.0049	— —	— —	— —	— —	— —	— —	+0.186 +0.0073	+0.120 +0.0047	0.120T 0.311T 0.0047T 0.0122T	+0.316 +0.0124	+0.250 +0.0098	0.250T 0.441T 0.0098T 0.0173T	+0.355 +0.0140	+0.250 +0.0098	0.250T 0.480T 0.0098T 0.0189T
1120	1250	-0.125 -0.0049	— —	— —	— —	— —	— —	— —	+0.186 +0.0073	+0.120 +0.0047	0.120T 0.311T 0.0047T 0.0122T	+0.326 +0.0128	+0.260 +0.0102	0.260T 0.451T 0.0102T 0.0177T	+0.365 +0.0144	+0.260 +0.0102	0.260T 0.490T 0.0102T 0.0193T

The tolerances in this table are in conformance with ANSIABMA Standard 7-1988.

A

SHAFT AND TOLERANCE FITS - *continued*

Bearing O.D.			F7			G7			H6			H7		
Nominal (Max.)		Tolerance **.000 mm** .0000 in. To	Housing Bore		Fit	Housing Bore		Fit	Housing Bore		Fit	Housing Bore		Fit
Over	Incl.		Min.	Max.		Min.	Max.		Min.	Max.		Min.	Max.	
mm		**mm** in.	**mm** in.			**mm** in.			**mm** in.			**mm** in.		
10	**18**	**-0.008** -0.0003	**+0.016** +0.0006	**+0.034** +0.0013	**0.016L** **0.042L** 0.0006L 0.0016L	**+0.002** +0.0002	**+0.024** +0.0009	**0.006L** **0.032L** 0.0002L 0.0012L	**0.000** 0.0000	**+0.011** +0.0004	**0.000L** **0.019L** 0.0000L 0.0007L	**0.000** 0.0000	**+0.018** +0.0007	**0.000L** **0.026L** 0.0000L 0.0010L
18	**30**	**-0.009** -0.0035	**+0.020** +0.0008	**+0.041** +0.0016	**0.020L** **0.050L** 0.0008L 0.0195L	**+0.007** +0.0003	**+0.028** +0.0011	**0.007L** **0.037L** 0.0003L 0.0145L	**0.000** 0.0000	**+0.013** +0.0008	**0.000L** **0.022L** 0.0000L 0.0085L	**0.000** 0.0000	**+0.021** +0.0008	**0.000L** **0.030L** 0.0000L 0.0115L
30	**50**	**-0.011** -0.0045	**+0.025** +0.0010	**+0.050** +0.0020	**0.025L** **0.061L** 0.0010L 0.0245L	**+0.009** +0.0004	**+0.034** +0.0013	**0.009L** **0.045L** 0.0004L 0.0175L	**0.000** 0.0000	**+0.016** +0.0006	**0.000L** **0.027L** 0.0000L 0.0105L	**0.000** 0.0000	**+0.025** +0.0010	**0.000L** **0.036L** 0.0000L 0.0145L
50	**80**	**-0.023** -0.0005	**+0.030** +0.0012	**+0.060** +0.0024	**0.030L** **0.073L** 0.0012L 0.0029L	**+0.010** +0.0004	**+0.040** +0.0016	**0.010L** **0.053L** 0.0004L 0.0021L	**0.000** 0.0000	**+0.019** +0.0007	**0.000L** **0.032L** 0.0000L 0.0012L	**0.000** 0.0000	**+0.030** +0.0012	**0.000L** **0.059L** 0.0000L 0.0023L
80	**120**	**-0.015** -0.0006	**+0.036** +0.0014	**+0.071** +0.0028	**0.036L** **0.086L** 0.0014L 0.0034L	**+0.012** +0.0005	**+0.047** +0.0019	**0.012L** **0.062L** 0.0005L 0.0025L	**0.000** 0.0000	**+0.022** **+0.0009**	**0.000L** **0.037L** 0.0000L 0.0015L	**0.000** 0.0000	**+0.035** +0.0014	**0.000L** **0.050L** 0.0000L 0.0020L
120	**150**	**-0.018** -0.0007	**+0.043** +0.0017	**+0.083** +0.0033	**0.043L** **0.101L** 0.0017L 0.0040L	**+0.014** +0.0006	**+0.054** +0.0021	**0.014L** **0.072L** 0.0006L 0.0028L	**0.000** 0.0000	**+0.025** +0.0010	**0.000L** **0.043L** 0.0000L 0.0017L	**0.000** 0.0000	**+0.040** +0.0016	**0.000L** **0.058L** 0.0000L 0.0023L
150	**180**	**-0.025** -0.0010	**+0.043** +0.0017	**+0.083** +0.0033	**0.043L** **0.108L** 0.0017L 0.0043L	**+0.014** +0.0006	**+0.054** +0.0021	**0.014L** **0.079L** 0.0006L 0.0031L	**0.000** 0.0000	**+0.025** +0.0010	**0.000L** **0.050L** 0.0000L 0.0020L	**0.000** 0.0000	**+0.040** +0.0016	**0.000L** **0.065L** 0.0000L 0.0026L
180	**250**	**-0.030** -0.0012	**+0.050** +0.0020	**+0.096** +0.0038	**0.050L** **0.126L** 0.0020L 0.0050L	**+0.015** +0.0006	**+0.061** +0.0024	**0.015L** **0.091L** 0.0006L 0.0036L	**0.000** 0.0000	**+0.029** +0.0011	**0.00L** **0.059L** 0.0000L 0.0023L	**0.000** 0.0000	**+0.046** +0.0018	**0.000L** **0.076L** 0.0000L 0.0030L
250	**315**	**-0.035** -0.0014	**+0.056** +0.0022	**+0.108** +0.0043	**0.056L** **0.143L** 0.0022L 0.0057L	**+0.017** +0.0007	**+0.069** +0.0027	**0.017L** **0.104L** 0.0007L 0.0041L	**0.000** 0.0000	**+0.032** +0.0013	**0.000L** **0.067L** 0.0000L 0.0027L	**0.000** 0.0000	**+0.052** +0.0020	**0.000L** **0.087L** 0.0000L 0.0034L

The tolerances in this table are in conformance with ANSIABMA Standard 7-1988.

SHAFT AND TOLERANCE FITS - *continued*

Bearing O.D.			H8			J6			J7			K6			K7		
Nominal (Max.)		Tolerance .000 mm .0000 in. To	Housing Bore		Fit	Housing Bore		Fit	Housing Bore		Fit	Housing Bore		Fit	Housing Bore		Fit
Over	Incl.		Min.	Max.		Min.	Max.		Min.	Max.		Min.	Max.		Min.	Max.	
mm		**mm** in.	**mm** in.			**mm** in.			**mm** in.			**mm** in.			**mm** in.		
10	**18**	**-0.008** -0.0003	**0.000** 0.0000	**+0.027** +0.0011	**0.000L** **0.035L** 0.0000L 0.0014L	**-0.005** -0.0002	**+0.006** +0.0002	**0.005T** **0.014L** 0.0002T 0.0005L	**-0.008** -0.0003	**+0.010** +0.0004	**0.008T** **0.018L** 0.0003T 0.0007L	**-0.009** -0.0004	**+0.002** +0.0001	**0.009T** **0.010L** 0.0004T 0.0004L	**-0.012** -0.0005	**+0.006** +0.0002	**0.012T** **0.014L** 0.0005T 0.0005L
18	**30**	**-0.009** -0.0035	**0.000** 0.0000	**+0.033** +0.0013	**0.000L** **0.030L** 0.0000L 0.0165L	**-0.005** -0.0002	**+0.008** +0.0003	**0.005T** **0.017L** 0.0002T 0.0065L	**-0.009** -0.0004	**+0.012** +0.0005	**0.009T** **0.021L** 0.0004T 0.0085L	**-0.011** -0.0004	**+0.002** +0.0001	**0.011T** **0.011L** 0.0004T 0.0045L	**-0.015** -0.0006	**+0.0006** +0.0002	**0.015T** **0.015L** 0.0006T 0.0055L
30	**50**	**-0.011** -0.0045	**0.000** 0.0000	**+0.039** +0.0015	**0.000L** **0.050L** 0.0000L 0.0195L	**-0.006** -0.0002	**+0.010** +0.0002	**0.006T** **0.021L** 0.0002T 0.0085L	**-0.011** -0.0004	**+0.014** +0.0006	**0.011T** **0.025L** 0.0004T 0.0105L	**-0.014** -0.0005	**+0.003** +0.0001	**0.013T** **0.014L** 0.0005T 0.0055L	**-0.018** -0.0007	**+0.007** +0.0003	**0.018T** **0.018L** 0.0007T 0.0075L
50	**80**	**-0.023** -0.0005	**0.000** 0.0000	**+0.046** +0.0018	**0.000L** **0.059L** 0.0000L 0.0023L	**-0.006** -0.0002	**+0.013** +0.0005	**0.006T** **0.026L** 0.0002T 0.0010L	**-0.012** -0.0005	**+0.018** +0.0007	**0.012T** **0.031L** 0.0005T 0.0012L	**-0.015** -0.0006	**+0.004** +0.0002	**0.015T** **0.017L** 0.0006T 0.0007L	**-0.021** -0.0008	**+0.0009** +0.0004	**0.021T** **0.022L** 0.0008T 0.0009L
80	**120**	**-0.015** -0.0006	**0.000** 0.0000	**+0.054** +0.0021	**0.000L** **0.069L** 0.0000L 0.0027L	**-0.006** -0.0002	**+0.016** +0.0006	**0.006T** **0.031L** 0.0002T 0.0012L	**-0.013** -0.0005	**+0.022** +0.0009	**0.013T** **0.037L** 0.0005T 0.0015L	**-0.018** -0.0007	**+0.004** +0.0002	**0.018T** **0.019L** 0.0007T 0.0008L	**-0.025** -0.0010	**+0.010** +0.0004	**0.025T** **0.025L** 0.0010T 0.0010L
120	**150**	**-0.018** -0.0007	**0.000** 0.0000	**+0.063** +0.0025	**0.000L** **0.081L** 0.0000L 0.0032L	**-0.007** -0.0003	**+0.018** +0.0007	**0.007T** **0.036L** 0.0003T 0.0014L	**-0.014** -0.0006	**+0.026** +0.0010	**0.014T** **0.044L** 0.0006T 0.0017L	**-0.021** -0.0008	**+0.004** +0.0002	**0.021T** **0.022L** 0.0008T 0.0009L	**-0.028** -0.0011	**+0.012** +0.0005	**0.028T** **0.030L** 0.0011T 0.0012L
150	**180**	**-0.025** -0.0010	**0.000** 0.0000	**+0.063** +0.0025	**0.000L** **0.088L** 0.0000L 0.0035L	**-0.007** -0.0003	**+0.018** +0.0007	**0.007T** **0.043L** 0.0003T 0.0017L	**-0.014** -0.0006	**+0.026** +0.0010	**0.014T** **0.051L** 0.0006T 0.0020L	**-0.021** -0.0008	**+0.004** +0.0002	**0.021T** **0.029L** 0.0008T 0.0012L	**-0.028** -0.0011	**+0.012** +0.0005	**0.028T** **0.037L** 0.0011T 0.0015L
180	**250**	**-0.030** -0.0012	**0.000** 0.0000	**+0.072** +0.0028	**0.000L** **0.102L** 0.0000L 0.0040L	**-0.007** -0.0003	**+0.022** +0.0007	**0.007T** **0.052L** 0.0003T 0.0021L	**-0.016** -0.0006	**+0.030** +0.0012	**0.016T** **0.060L** 0.0006T 0.0024L	**-0.024** -0.0009	**+0.0005** +0.0002	**0.024T** **0.035L** 0.0009T 0.0014L	**-0.033** -0.0013	**+0.013** +0.0005	**0.033T** **0.043L** 0.0013T 0.0017L
250	**315**	**-0.035** -0.0014	**0.000** 0.0000	**+0.081** +0.0032	**0.000L** **0.116L** 0.0000L 0.0046L	**-0.007** -0.0003	**+0.025** +0.0010	**0.007T** **0.060L** 0.0003T 0.0024L	**-0.016** -0.0006	**+0.036** +0.0014	**0.016T** **0.071L** 0.0006T 0.0028L	**-0.027** -0.0011	**+0.005** +0.0002	**0.027T** **0.040L** 0.0011T 0.0016L	**-0.036** -0.0014	**+0.016** +0.0006	**0.036T** **0.051L** 0.0014T 0.0020L

A

SHAFT AND TOLERANCE FITS - *continued*

Bearing O.D.			F7			G7			H8			H7		
Nominal (Max.)		Tolerance .000 mm .0000 in. To	Housing Bore		Fit	Housing Bore		Fit	Housing Bore		Fit	Housing Bore		Fit
Over	Incl.		Min.	Max.		Min.	Max.		Min.	Max.		Min.	Max.	
mm		mm in.	mm in.			mm in.			mm in.			mm in.		
315	**400**	**-0.040** -0.0016	**+0.062** +0.0024	**+0.119** +0.0047	**0.063L** **0.159L** 0.0024L 0.0062L	**+0.018** +0.0007	**+0.075** +0.0030	**0.018L** **0.115L** 0.0007L 0.0046L	**0.000** 0.0000	**+0.089** +0.0035	**0.000L** **0.129L** 0.0000L 0.0051L	**0.000** 0.0000	**+0.057** +0.0022	**0.000L** **0.097L** 0.0000L 0.0038L
400	**500**	**-0.045** -0.0018	**+0.068** +0.0027	**+0.131** +0.0052	**0.068L** **0.176L** 0.0027L 0.0070L	**+0.020** +0.0008	**+0.083** +0.0033	**0.020L** **0.128L** 0.0008L 0.0051L	**0.000** 0.0000	**+0.097** +0.0038	**0.000L** **0.142L** 0.0000L 0.0056L	**0.000** 0.0000	**+0.063** +0.0025	**0.000L** **0.108L** 0.0000L 0.0043L
500	**630**	**-0.050** -0.0020	**+0.076** +0.0030	**+0.146** +0.0057	**0.076L** **0.196L** 0.0030L 0.0077L	**+0.022** +0.0009	**+0.092** +0.0036	**0.022L** **0.142L** 0.0009L 0.0056L	**0.000** 0.0000	**+0.110** +0.0043	**0.000L** **0.160L** 0.0000L 0.0063L	**0.000** 0.0000	**+0.070** +0.0028	**0.000L** **0.120L** 0.0000L 0.0048L
630	**800**	**-0.075** -0.0030	**+0.080** +0.0031	**+0.160** +0.0063	**0.080L** **0.235L** 0.0031L 0.0093L	**+0.024** +0.0009	**+0.104** +0.0041	**0.024L** **0.179L** 0.0009L 0.0007L	**0.000** 0.0000	**+0.125** +0.0049	**0.000L** **0.200L** 0.0000L 0.0079L	**0.000** 0.0000	**+0.080** +0.0031	**0.000L** **0.155L** 0.0000L 0.0061L
800	**1000**	**-0.100** -0.0039	**+0.086** +0.0034	**+0.179** +0.0069	**0.086L** **0.276L** 0.0034L 0.0108L	**+0.026** +0.0010	**+0.116** +0.0046	**0.026L** **0.216L** 0.0010L 0.0085L	**0.000** 0.0000	**+0.140** +0.0055	**0.000L** **0.240L** 0.0000L 0.0094L	**0.000** 0.0000	**+0.090** +0.0035	**0.000L** **0.190L** 0.0000L 0.0074L
1000	**1250**	**-0.125** -0.0049	**+0.098** +0.0039	**+0.203** +0.0080	**0.098L** **0.328L** 0.0039L 0.0129L	**+0.028** +0.0011	**+0.133** +0.0052	**0.028L** **0.258L** 0.0011L 0.0101L	**0.000** 0.0000	**+0.165** +0.0065	**0.000L** **0.290L** 0.0000L 0.0114L	**0.000** 0.0000	**+0.105** +0.0041	**0.000L** **0.230L** 0.0000L 0.0090L
1250	**1600**	**-0.160** -0.0063	**+0.030** +0.0012	**+0.155** +0.0061	**0.110L** **0.395L** 0.0043L 0.0156L	**+0.030** +0.0012	**+0.155** +0.0061	**0.030L** **0.315L** 0.0012L 0.0124L	**0.000** 0.0000	**+0.195** +0.0077	**0.000L** **0.355L** 0.0000L 0.0140L	**0.000** 0.0000	**+0.125** +0.0049	**0.000L** **0.355L** 0.0000L 0.0140L
1600	**2000**	**-0.106** -0.0047	**+0.120** +0.0047	**+0.270** +0.0106	**0.120L** **0.470L** 0.0047L 0.0185L	**+0.032** +0.0013	**+0.182** +0.0072	**0.032L** **0.382L** 0.0013L 0.0151L	**0.000** 0.0000	**+0.230** +0.0091	**0.000L** **0.430L** 0.0000L 0.0170L	**0.000** 0.0000	**+0.150** +0.0059	**0.000L** **0.350L** 0.0000L 0.0138L
2000	**2500**	**-0.250** -0.0098	**+0.130** +0.0051	**+0.305** +0.0120	**0.130L** **0.555L** 0.0051L 0.0218L	**+0.034** +0.0013	**+0.209** +0.0082	**0.034L** **0.459L** 0.0013L 0.0180L	**0.000** 0.0000	**+0.280** +0.0110	**0.000L** **0.530L** 0.0000L 0.0208L	**0.000** 0.0000	**+0.175** +0.0069	**0.000L** **0.425L** 0.0000L 0.0167L

The tolerances in this table are in conformance with ANSIABMA Standard 7-1988.

SHAFT AND TOLERANCE FITS - *continued*

Bearing O.D.			H6			J6			J7			K6			K7		
Nominal (Max.)		Tolerance .000 mm .0000 in. To	Housing Bore		Fit	Housing Bore		Fit	Housing Bore		Fit	Housing Bore		Fit	Housing Bore		Fit
Over	Incl.		Min.	Max.		Min.	Max.		Min.	Max.		Min.	Max.		Min.	Max.	
mm		**mm** in.	**mm** in.			**mm** in.			**mm** in.			**mm** in.			**mm** in.		
315	**400**	**-0.040** -0.0016	**0.000** 0.0000	**+0.036** +0.0014	**0.000L 0.076L** 0.0000L 0.0030L	**-0.007** -0.0003	**+0.029** +0.0011	**0.007T 0.069L** 0.0003T 0.0027L	**-0.018** -0.0007	**+0.039** +0.0015	**0.018T 0.079L** 0.0007T 0.0031L	**-0.029** -0.0011	**+0.007** +0.0003	**0.029T 0.047L** 0.0011T 0.0019L	**-0.040** -0.0016	**+0.017** +0.0007	**0.040T 0.057L** 0.0016T 0.0023L
400	**500**	**-0.045** -0.0018	**0.000** 0.0000	**+0.040** +0.0016	**0.000L 0.085L** 0.0000L 0.0034L	**-0.007** -0.0003	**+0.033** +0.0013	**0.007T 0.078L** 0.0003T 0.0031L	**-0.020** -0.0008	**+0.043** 0.0017	**0.020T 0.088L** 0.0008T 0.0035L	**-0.032** -0.0013	**+0.008** +0.0003	**0.032T 0.053L** 0.0013T 0.0021L	**-0.045** -0.0018	**+0.018** +0.0007	**0.045T 0.063L** 0.0018T 0.0025L
500	**630**	**-0.050** -0.0020	**0.000** 0.0000	**+0.044** +0.0017	**0.000L 0.094L** 0.0000L 0.0037L	**-0.007** -0.0003	**+0.037** +0.0015	**0.022T 0.098L** 0.0009T 0.0039L	**-0.022** -0.0009	**+0.048** +0.0019	**0.022T 0.098L** 0.0009T 0.0039L	**-0.044** -0.0017	**0.000** 0.0000	**0.044T 0.050L** 0.0017T 0.0020L	**-0.070** -0.0028	**0.000** 0.0000	**0.070T 0.050L** 0.0028T 0.0020L
630	**800**	**-0.075** -0.0030	**0.000** 0.0000	**+0.050** +0.0020	**0.000L 0.125L** 0.0000L 0.0050L	**-0.010** -0.0004	**+0.040** +0.0016	**0.010T 0.115L** 0.0004T 0.0046L	**-0.024** -0.0009	**+0.056** +0.0022	**0.024T 0.131L** 0.0009T 0.0052L	**-0.050** -0.0020	**0.000** 0.0000	**0.050T 0.075L** 0.0020T 0.0030L	**-0.080** -0.0031	**0.000** 0.0000	**0.080T 0.075L** 0.0031T 0.0030L
800	**1000**	**-0.100** -0.0039	**0.000** 0.0000	**+0.056** +0.0022	**0.000L 0.156L** 0.0000L 0.0061L	**-0.010** -0.0004	**+0.046** +0.0018	**0.010T 0.146L** 0.0004T 0.0057L	**-0.026** -0.0010	**+0.064** +0.0025	**0.026T 0.164L** 0.0010T 0.0064L	**-0.056** -0.0022	**0.000** 0.0000	**0.056T 0.100L** 0.0022T 0.0039L	**-0.090** -0.0035	**0.000** 0.0000	**0.090T 0.100L** 0.0035T 0.0039L
1000	**1250**	**-0.125** -0.0049	**0.000** 0.0000	**+0.066** +0.0026	**0.000L 0.191L** 0.0000L 0.0075L	**-0.010** -0.0004	**+0.056** +0.0022	**0.010T 0.181L** 0.0004T 0.0071L	**-0.028** -0.0011	**+0.077** +0.0030	**0.028T 0.202L** 0.0011T 0.0079L	**-0.066** -0.0026	**0.000** 0.0000	**0.066T 0.125L** 0.0026T 0.0049L	**-0.105** -0.0041	**0.000** 0.0000	**0.105T 0.125L** 0.0041T 0.0049L
1250	**1600**	**-0.160** -0.0063	**0.000** 0.0000	**+0.078** +0.0031	**0.000L 0.238L** 0.0000L 0.0094L	**-0.010** -0.0004	**+0.068** +0.0027	**0.010T 0.228L** 0.0004T 0.0090L	**-0.030** -0.0012	**+0.095** +0.0037	**0.030T 0.255L** 0.0012T 0.0100L	**-0.078** -0.0031	**0.000** 0.0000	**0.078T 0.160L** 0.0031T 0.0063L	**-0.125** -0.0049	**0.000** 0.0000	**0.125T 0.160L** 0.0049T 0.0063L
1600	**2000**	**-0.106** -0.0047	**0.000** 0.0000	**+0.092** +0.0036	**0.000L 0.292L** 0.0000L 0.0115L	**-0.010** -0.0004	**+0.082** +0.0032	**0.110T 0.282L** 0.0004T 0.0011L	**-0.032** -0.0013	**+0.118** +0.0046	**0.032T 0.318L** 0.0013T 0.0125L	**-0.092** -0.0036	**0.000** 0.0000	**0.092T 0.200L** 0.0036T 0.0079L	**-0.150** -0.0059	**0.000** 0.0000	**0.150T 0.200L** 0.0059T 0.0079L
2000	**2500**	**-0.250** -0.0098	**0.000** 0.0000	**+0.110** +0.0043	**0.000L 0.360L** 0.0000L 0.0141L	**-0.010** -0.0004	**+0.100** +0.0039	**0.010T 0.350L** 0.0004T 0.0137L	**-0.034** -0.0013	**+0.141** +0.0056	**0.034T 0.391L** 0.0013T 0.0154L	**-0.110** -0.0043	**0.000** 0.0000	**0.110T 0.250L** 0.0043T 0.0098L	**-0.175** -0.0069	**0.000** 0.0000	**0.175T 0.250L** 0.0069T 0.0098L

A

SHAFT AND TOLERANCE FITS - *continued*

Bearing O.D.			M6			M7			N6		
Nominal (Max.)		Tolerance **.000 mm** .0000 in. To	Housing Bore		Fit	Housing Bore		Fit	Housing Bore		Fit
Over	Incl.		Min.	Max.		Min.	Max.		Min.	Max.	
mm		**mm** in.	**mm** in.			**mm** in.			**mm** in.		
10	**18**	**-0.008** -0.0003	**-0.015** -0.0006	**-0.004** -0.0002	**0.015T** **0.004L** 0.0006T 0.0001L	**-0.018** -0.0007	**0.000** 0.0000	**0.018T** **0.008L** 0.0007T 0.0003L	**-0.020** -0.0008	**-0.009** -0.0004	**0.020T** **0.001T** 0.0008T 0.0001T
18	**30**	**-0.009** -0.0035	**-0.017** -0.0007	**-0.004** -0.0002	**0.017T** **0.005L** 0.0007T 0.0015L	**-0.021** -0.0008	**0.000** 0.0000	**0.021T** **0.009L** 0.0008T 0.0035L	**-0.028** -0.0009	**-0.007** -0.0004	**0.024T** **0.002T** 0.0009T 0.0005T
30	**50**	**-0.011** -0.0045	**-0.020** -0.0008	**-0.004** -0.0002	**0.020T** **0.007L** 0.0008T 0.0025L	**-0.025** -0.0010	**0.000** 0.0000	**0.025T** **0.011L** 0.0010T 0.0045L	**-0.028** -0.0011	**-0.012** -0.0005	**0.028T** **0.001T** 0.0011T 0.0005T
50	**80**	**-0.013** -0.0005	**-0.024** -0.0009	**-0.005** -0.0002	**0.024T** **0.008L** 0.0009T 0.0003L	**-0.030** -0.0012	**0.000** 0.0000	**0.030T** **0.013L** 0.0012T 0.0005L	**-0.033** -0.0013	**-0.014** -0.0006	**0.033T** **0.001T** 0.0013T 0.0001T
80	**120**	**-0.015** -0.0006	**-0.028** -0.0011	**-0.006** -0.0002	**0.028T** **0.009L** 0.0011T 0.0004L	**-0.035** -0.0014	**0.000** 0.0000	**0.035T** **0.015L** 0.0014T 0.0006L	**-0.038** -0.0015	**-0.016** -0.0006	**0.038T** **0.001T** 0.0025T 0.0000T
120	**150**	**-0.018** -0.0007	**-0.033** -0.0013	**-0.008** -0.0003	**0.033T** **0.010L** 0.0013T 0.0004L	**-0.040** -0.0016	**0.000** 0.0000	**0.040T** **0.018L** 0.0016T 0.0007L	**-0.045** -0.0018	**-0.020** -0.0008	**0.045T** **0.002T** 0.0018T 0.0001T
150	**180**	**-0.025** -0.0010	**-0.033** -0.0013	**-0.008** -0.0003	**0.033T** **0.017L** 0.0013T 0.0004L	**-0.040** -0.0016	**0.000** 0.0000	**0.040T** **0.025L** 0.0016T 0.0010L	**-0.045** -0.0018	**-0.020** -0.0008	**0.045T** **0.005T** 0.0018T 0.0002T
180	**250**	**-0.030** -0.0012	**-0.037** -0.0015	**-0.008** -0.0003	**0.037T** **0.022L** 0.0015T 0.0009L	**-0.046** -0.0018	**0.000** 0.0000	**0.046T** **0.030L** 0.0018T 0.0012L	**-0.051** -0.0020	**-0.022** -0.0009	**0.051T** **0.008T** 0.0020T 0.0003T
250	**315**	**-0.035** -0.0014	**-0.041** -0.0016	**-0.009** -0.0004	**0.041T** **0.026L** 0.0016T 0.0010L	**-0.052** -0.0020	**0.000** 0.0000	**0.052T** **0.035L** 0.0020T 0.0014L	**-0.057** -0.0022	**-0.025** -0.0010	**0.057T** **0.010T** 0.0022T 0.0004T

The tolerances in this table are in conformance with ANSIABMA Standard 7-1988.

SHAFT AND TOLERANCE FITS - *continued*

Bearing O.D.			N7			P6			P7		
Nominal (Max.)		Tolerance **.000 mm** .0000 in. To	Housing Bore		Fit	Housing Bore		Fit	Housing Bore		Fit
Over	Incl.		Min.	Max.		Min.	Max.		Min.	Max.	
mm		**mm** in.	**mm** in.			**mm** in.			**mm** in.		
10	**18**	**-0.008** -0.0003	**-0.023** -0.0009	**-0.005** -0.0002	**0.023T** **0.003L** 0.0009T 0.0001L	**-0.026** -0.0010	**-0.015** -0.0006	**0.026T** **0.007T** 0.0010T 0.0003T	**-0.029** -0.0011	**-0.011** -0.0004	**0.029T** **0.003T** 0.0011T 0.0001T
18	**30**	**-0.009** -0.0035	**-0.028** -0.0011	**-0.007** -0.0003	**0.028T** **0.002L** 0.0011T 0.0005L	**-0.031** -0.0012	**-0.018** -0.0007	**0.031T** **0.009T** 0.0012T 0.0035T	**-0.035** -0.0014	**-0.014** -0.0006	**0.035T** **0.005T** 0.0014T 0.0025T
30	**50**	**-0.011** -0.0045	**-0.033** -0.0013	**-0.008** -0.0003	**0.033T** **0.003L** 0.0013T 0.0015L	**-0.037** -0.0015	**-0.021** -0.0008	**0.037T** **0.010T** 0.0015T 0.0035T	**-0.042** -0.0017	**-0.017** -0.0007	**0.042T** **0.006T** 0.0017T 0.0025T
50	**80**	**-0.013** -0.0005	**-0.039** -0.0015	**-0.009** -0.0004	**0.039T** **0.004L** 0.0015T 0.0001L	**-0.045** -0.0018	**-0.026** -0.0010	**0.045T** **0.013T** 0.0018T 0.0005T	**-0.051** -0.0020	**-0.021** -0.0008	**0.051T** **0.008T** 0.0020T 0.0003T
80	**120**	**-0.015** -0.0006	**-0.045** -0.0018	**-0.010** -0.0004	**0.045T** **0.005L** 0.0018T 0.0002L	**-0.052** -0.0020	**-0.030** -0.0012	**0.052T** **0.015T** 0.0020T 0.0006T	**-0.059** -0.0023	**-0.024** -0.0009	**0.059T** **0.009T** 0.0023T 0.0003T
120	**150**	**-0.018** -0.0007	**-0.052** -0.0020	**-0.012** -0.0005	**0.061T** **0.018L** 0.0024T 0.0007L	**-0.061** -0.0024	**-0.036** -0.0014	**0.061T** **0.018T** 0.0024T 0.0007T	**-0.068** -0.0027	**-0.028** -0.0011	**0.068T** **0.010T** 0.0027T 0.0004T
150	**180**	**-0.025** -0.0010	**-0.052** -0.0020	**-0.012** -0.0005	**0.052T** **0.013L** 0.0020T 0.0005L	**-0.061** -0.0024	**-0.036** -0.0014	**0.061T** **0.011T** 0.0024T 0.0007T	**-0.068** -0.0027	**-0.028** -0.0011	**0.068T** **0.003T** 0.0011T 0.0001T
180	**250**	**-0.030** -0.0012	**-0.060** -0.0024	**-0.014** -0.0006	**0.060T** **0.016L** 0.0024T 0.0006L	**-0.070** -0.0028	**-0.041** -0.0016	**0.070T** **0.011T** 0.0028T 0.0004T	**-0.079** -0.0031	**-0.033** -0.0013	**0.079T** **0.003T** 0.0031T 0.0001T
250	**315**	**-0.035** -0.0014	**-0.066** -0.0026	**-0.014** -0.0006	**0.066T** **0.021L** 0.0025T 0.0008L	**-0.079** -0.0031	**-0.047** -0.0019	**0.079T** **0.012T** 0.0031T 0.0005T	**-0.088** -0.0035	**-0.036** -0.0014	**0.088T** **0.001T** 0.0035T 0.0000T

A

SHAFT AND TOLERANCE FITS - *continued*

Bearing O.D.			M6			M7			N6		
Nominal (Max.)		Tolerance .000 mm .0000 in. To	Housing Bore		Fit	Housing Bore		Fit	Housing Bore		Fit
Over	Incl.		Min.	Max.		Min.	Max.		Min.	Max.	
mm		mm in.	mm in.			mm in.			mm in.		
315	**400**	**-0.040** -0.0016	**-0.046** -0.0018	**-0.010** -0.0004	**0.046T** **0.030L** 0.0018T 0.0012L	**-0.057** -0.0022	**0.000** 0.0000	**0.057T** **0.040L** 0.0022T 0.0016L	**-0.062** -0.0029	**-0.026** -0.0006	**0.062T** **0.014T** 0.0024T 0.0006T
400	**500**	**-0.045** -0.0018	**-0.050** -0.0020	**-0.010** -0.0004	**0.050T** **0.035L** 0.0020T 0.0014L	**-0.063** -0.0025	**0.000** 0.0000	**0.063T** **0.045L** 0.0025T 0.0018L	**-0.067** -0.0026	**-0.027** -0.0011	**0.067T** **0.018T** 0.0026T 0.0007T
500	**630**	**-0.050** -0.0020	**-0.070** -0.0028	**-0.026** -0.0010	**0.070T** **0.024L** 0.0028T 0.0010L	**-0.096** -0.0038	**-0.026** -0.0010	**0.096T** **0.024L** 0.0038T 0.0010L	**-0.088** -0.0035	**-0.044** -0.0017	**0.088T** **0.006T** 0.0035T 0.0003T
630	**800**	**-0.075** -0.0030	**-0.080** -0.0031	**-0.030** -0.0012	**0.080T** **0.045L** 0.0031T 0.0018L	**-0.110** -0.0043	**-0.030** -0.0012	**0.110T** **0.045L** 0.0043T 0.0018L	**-0.100** -0.0039	**-0.050** -0.0020	**0.100T** **0.025T** 0.0039T 0.0010T
800	**1000**	**-0.100** -0.0039	**-0.090** -0.0035	**-0.034** -0.0013	**0.090T** **0.066L** 0.0035T 0.0026L	**-0.124** -0.0049	**-0.034** -0.0013	**0.124T** **0.066L** 0.0049T 0.0026L	**-0.112** -0.0044	**-0.056** -0.0022	**0.112T** **0.044T** 0.0044T 0.0017T
1000	**1250**	**-0.125** -0.0049	**-0.106** -0.0042	**-0.040** -0.0016	**0.106T** **0.085L** 0.0042T 0.0033L	**-0.145** -0.0057	**-0.040** -0.0016	**0.145T** **0.085L** 0.0057T 0.0033L	**-0.132** -0.0052	**-0.066** -0.0026	**0.132T** **0.059T** 0.0052T 0.0023T
1250	**1600**	**-0.160** -0.0063	**-0.126** -0.0050	**-0.048** -0.0019	**0.126T** **0.112L** 0.0050T 0.0044L	**-0.173** -0.0068	**-0.048** -0.0019	**0.173T** **0.112L** 0.0068T 0.0044L	**-0.156** -0.0061	**-0.078** -0.0031	**0.156T** **0.082T** 0.0061T 0.0032T
1600	**2000**	**-0.200** -0.0079	**-0.150** -0.0059	**-0.058** -0.0023	**0.150T** **0.142L** 0.0059T 0.0056L	**-0.208** -0.0082	**-0.058** -0.0023	**0.208T** **0.142L** 0.0082T 0.0056L	**-0.184** -0.0072	**-0.092** -0.0036	**0.184T** **0.108T** 0.0072T 0.0043T
2000	**2500**	**-0.250** -0.0098	**-0.178** -0.0070	**-0.068** -0.0027	**0.178T** **0.182L** 0.0070T 0.0071L	**-0.243** -0.0096	**-0.068** -0.0027	**0.243T** **0.182L** 0.0096T 0.0071L	**-0.220** -0.0087	**-0.110** -0.0043	**0.285T** **0.140T** 0.112T 0.055T

The tolerances in this table are in conformance with ANSIABMA Standard 7-1988.

SHAFT AND TOLERANCE FITS - *continued*

Bearing O.D.			N7			P6			P7		
Nominal (Max.)		Tolerance **.000 mm** .0000 in. To	Housing Bore		Fit	Housing Bore		Fit	Housing Bore		Fit
Over	Incl.		Min.	Max.		Min.	Max.		Min.	Max.	
mm		**mm** in.	**mm** in.			**mm** in.			**mm** in.		
315	**400**	**-0.040** -0.0016	**-0.073** -0.0029	**-0.016** -0.0006	**0.073T** **0.024L** 0.0029T 0.0010L	**-0.087** -0.0034	**-0.051** -0.0020	**0.087T** **0.011T** 0.0034T 0.0004T	**-0.098** -0.0039	**-0.041** -0.0016	**0.098T** **0.001T** 0.0039T 0.0000T
400	**500**	**-0.045** -0.0018	**-0.080** -0.0031	**-0.017** -0.0007	**0.080T** **0.028L** 0.0031T 0.0011L	**-0.095** -0.0037	**-0.055** -0.0022	**0.095T** **0.010T** 0.0037T 0.0004T	**-0.108** -0.0043	**-0.045** -0.0018	**0.108T** **0.000T** 0.0043T 0.0000T
500	**630**	**-0.050** -0.0020	**-0.114** -0.0045	**-0.044** -0.0017	**0.114T** **0.006L** 0.0045T 0.0003L	**-0.122** -0.0048	**-0.078** -0.0031	**0.122T** **0.028T** 0.0048T 0.0011T	**-0.148** -0.0058	**-0.078** -0.0031	**0.148T** **0.028T** 0.0058T 0.0011T
630	**800**	**-0.075** -0.0030	**-0.130** -0.0051	**-0.050** -0.0020	**0.130T** **0.025L** 0.0051T 0.0010L	**-0.138** -0.0054	**-0.088** -0.0035	**0.138T** **0.013T** 0.0054T 0.0005T	**-0.168** -0.0066	**-0.088** -0.0035	**0.168T** **0.013T** 0.0066T 0.0005T
800	**1000**	**-0.100** -0.0039	**-0.146** -0.0057	**-0.056** -0.0022	**0.146T** **0.044L** 0.0057T 0.0017L	**-0.156** -0.0061	**-0.100** -0.0039	**0.156T** **0.000T** 0.0061T 0.0000T	**-0.190** -0.0075	**-0.100** -0.0039	**0.190T** **0.000T** 0.0075T 0.0000T
1000	**1250**	**-0.125** -0.0049	**-0.171** -0.0067	**-0.066** -0.0026	**0.171T** **0.059L** 0.0067T 0.0023L	**-0.186** -0.0073	**-0.120** -0.0047	**0.171T** **0.059L** 0.0067T 0.0023L	**-0.225** -0.0089	**-0.120** -0.0047	**0.225T** **0.005L** 0.0089T 0.0002L
1250	**1600**	**-0.160** -0.0063	**-0.203** -0.0080	**-0.078** -0.0031	**0.203T** **0.082L** 0.0080T 0.0023L	**-0.218** -0.0086	**-0.140** -0.0055	**0.218T** **0.020L** 0.0086T 0.0008L	**-0.265** -0.0104	**-0.140** -0.0055	**0.265T** **0.020L** 0.0104T 0.0008L
1600	**2000**	**-0.200** -0.0079	**-0.242** -0.0095	**-0.092** -0.0036	**0.242T** **0.108L** 0.0095T 0.0043L	**-0.262** -0.0103	**-0.170** -0.0067	**0.262T** **0.030L** 0.0103T 0.0012L	**-0.320** -0.0126	**-0.170** -0.0067	**0.320T** **0.030L** 0.0126T 0.0012L
2000	**2500**	**-0.250** -0.0098	**-0.285** -0.0112	**-0.110** -0.0043	**0.285T** **0.140L** 0.0112T 0.0055L	**-0.305** -0.0120	**-0.195** -0.0077	**0.305T** **0.055L** 0.0120T 0.0021L	**-0.370** -0.0146	**-0.195** -0.0077	**0.370T** **0.055L** 0.0146T 0.0021L

A

MOUNTING DESIGNS

Correct bearing mounting and fitting practices are key components of proper bearing setting. Setting is the amount of clearance or interference within a mounted bearing. Bearing internal clearance is affected by the tightness of the fit to the inner and outer races. Proper bearing setting is crucial to bearing life and performance. Although clearance is required for most mounted bearings, application dependent factors include load, speed, bearing position, installation method, materials of construction, runout accuracy, thermal considerations, hoop stress, and shaft and housing design. This section provides tables and discussion to aid in selection of the proper bearing mounting and fitting procedures to optimize performance in general applications. For special applications, please consult your Timken representative.

RADIAL INTERNAL CLEARANCE (RIC)

Timken bearing RIC allows a tight fit, with sufficient internal clearance after installation for normal operating conditions. Table 11 lists the standard RIC ranges for Timken spherical roller bearings with cylindrical and tapered bores.

Spherical roller bearings with tapered bore (K) require a slightly greater interference fit on the shaft than a cylindrical bore bearing. The effect of this greater interference fit is a reduction of RIC. For tapered bore bearings, it is critical to select the RIC that allows for this reduction.

Several factors influence RIC reduction. Inner rings pressed into solid steel shafts expand approximately 80 percent of the interference fit. Outer rings pressed into steel or cast iron housings reduce RIC by about 60 percent of the interference fit. For RIC reduction on hollow shafts or non-steel materials consult your local Timken representative.

Timken bearings are supplied with NORMAL RIC, unless otherwise specified. The desired RIC code must be added to the bearing number, FOLLOWING ALL OTHER SUFFIXES.

Min./Max. values for each RIC are shown in the two adjacent columns directly beneath the selected RIC. Each single column represents a boundary between adjacent RICs. For example, the minimum values shown for C5 are also the maximum values for C4; minimum values for C4 are also the maximum values for C3, etc.

BEARING ENDPLAY

In certain applications such as vane pumps, rubber mill rotor shafts or where it is necessary to take up axial expansion within the bearing, knowledge of the bearing endplay relationship to mounted radial internal clearance may be required. Table 10 shows the ratio of approximate endplay to radial internal clearance in spherical roller bearings.

Example: 22320CJW33C3 bearing has a radial internal clearance of .002 after installation. The total endplay would be approximately .0086 in. (± .0043 from center).

Series	Endplay / RIC
39	8.7
30	7.0
22	5.5
31	5.0
40	4.8
32	4.4
23	4.3
41	4.2
33	3.9

Table 10. Ratio of approximate endplay-to-RIC for Timken spherical roller bearings.

A

MOUNTING DESIGNS - *continued*

RADIAL INTERNAL CLEARANCE LIMITS – RADIAL SPHERICAL ROLLER BEARINGS

All data on this page, except Bore I.D., are in millimeters/inches

Bore (nominal)		Cylindrical Bore						Tapered Bore						Suggested Reduction of RIC Due to Installation		Minimum RIC after Installation[1]
			Normal C0 Min.	Normal C0 Max.	C4 Min.	C4 Max.			Normal C0 Min.	Normal C0 Max.	C4 Min.	C4 Max.				
		C2		C3		C5		C2		C3		C5				
mm		Min.	Max.	Min.	Max.	Min.	Max.	Min.	Max.	Min.	Max.	Min.	Max.	Min.	Max.	Min.
over	incl.	mm inch	mm inch	mm inch	mm inch	mm inch	mm inch	mm inch	mm inch	mm inch	mm inch	mm inch	mm inch	mm inch	mm inch	mm inch
24	30	**0.015**	**0.025**	**0.040**	**0.055**	**0.075**	**0.095**	**0.020**	**0.030**	**0.040**	**0.055**	**0.075**	**0.095**	**0.015**	**0.020**	**0.015**
		0.0006	0.0010	0.0016	0.0022	0.0030	0.0037	0.0008	0.0012	0.0016	0.0022	0.0030	0.0037	0.0006	0.0008	0.0006
30	40	**0.015**	**0.030**	**0.045**	**0.060**	**0.080**	**1.000**	**0.025**	**0.035**	**0.050**	**0.065**	**0.085**	**0.105**	**0.020**	**0.025**	**0.015**
		0.0006	0.0012	0.0018	0.0024	0.0031	0.0039	0.0010	0.0014	0.0020	0.0026	0.0033	0.0041	0.0008	0.0010	0.0006
40	50	**0.020**	**0.035**	**0.055**	**0.075**	**0.100**	**0.125**	**0.030**	**0.045**	**0.060**	**0.080**	**0.100**	**0.130**	**0.025**	**0.030**	**0.020**
		0.0008	0.0014	0.0022	0.0030	0.0039	0.0049	0.0012	0.0018	0.0024	0.0031	0.0039	0.0051	0.0010	0.0012	0.0008
50	65	**0.020**	**0.040**	**0.065**	**0.090**	**0.120**	**0.150**	**0.040**	**0.055**	**0.075**	**0.095**	**0.120**	**0.160**	**0.030**	**0.038**	**0.025**
		0.0008	0.0016	0.0026	0.0035	0.0047	0.0059	0.0016	0.0022	0.0030	0.0037	0.0047	0.0063	0.0012	0.0015	0.0010
65	80	**0.030**	**0.050**	**0.080**	**0.110**	**0.145**	**0.180**	**0.050**	**0.070**	**0.095**	**0.120**	**0.150**	**0.200**	**0.038**	**0.051**	**0.025**
		0.0012	0.0020	0.0031	0.0043	0.0057	0.0071	0.0020	0.0028	0.0037	0.0047	0.0059	0.0079	0.0015	0.0020	0.0010
80	100	**0.035**	**0.060**	**0.100**	**0.135**	**0.180**	**0.225**	**0.055**	**0.080**	**0.110**	**0.140**	**0.180**	**0.230**	**0.046**	**0.064**	**0.036**
		0.0014	0.0024	0.0039	0.0053	0.0071	0.0089	0.0022	0.0030	0.0043	0.0055	0.0071	0.0091	0.0018	0.0025	0.0014
100	120	**0.040**	**0.075**	**0.120**	**0.160**	**0.210**	**0.260**	**0.065**	**0.100**	**0.135**	**0.170**	**0.220**	**0.280**	**0.051**	**0.071**	**0.051**
		0.0016	0.0030	0.0047	0.0063	0.0083	0.0102	0.0026	0.0039	0.0053	0.0067	0.0087	0.0110	0.0020	0.0028	0.0020
120	140	**0.050**	**0.095**	**0.145**	**0.190**	**0.240**	**0.300**	**0.080**	**0.120**	**0.160**	**0.200**	**0.260**	**0.330**	**0.064**	**0.089**	**0.056**
		0.0020	0.0037	0.0057	0.0075	0.0094	0.0118	0.0031	0.0047	0.0063	0.0079	0.0102	0.0130	0.0025	0.0035	0.0022
140	160	**0.060**	**0.110**	**0.170**	**0.220**	**0.280**	**0.350**	**0.090**	**0.130**	**0.180**	**0.230**	**0.300**	**0.380**	**0.076**	**0.102**	**0.056**
		0.0024	0.0043	0.0067	0.0087	0.0110	0.0138	0.0035	0.0051	0.0071	0.0091	0.0118	0.0150	0.0030	0.0040	0.0022
160	180	**0.065**	**0.120**	**0.180**	**0.240**	**0.310**	**0.390**	**0.100**	**0.140**	**0.200**	**0.260**	**0.340**	**0.430**	**0.076**	**0.114**	**0.061**
		0.0026	0.0047	0.0071	0.0094	0.0122	0.0154	0.0039	0.0055	0.0079	0.0102	0.0134	0.0169	0.0030	0.0045	0.0024
180	200	**0.070**	**0.130**	**0.200**	**0.260**	**0.340**	**0.430**	**0.110**	**0.160**	**0.220**	**0.290**	**0.370**	**0.470**	**0.089**	**0.127**	**0.071**
		0.0028	0.0051	0.0079	0.0102	0.0134	0.0169	0.0043	0.0063	0.0087	0.0114	0.0146	0.0185	0.0035	0.0050	0.0028
200	225	**0.080**	**0.140**	**0.220**	**0.290**	**0.380**	**0.470**	**0.120**	**0.180**	**0.250**	**0.320**	**0.410**	**0.520**	**0.102**	**0.140**	**0.076**
		0.0031	0.0055	0.0087	0.0114	0.0150	0.0185	0.0047	0.0071	0.0098	0.0126	0.0161	0.0205	0.0040	0.0055	0.0030
225	250	**0.090**	**0.150**	**0.240**	**0.320**	**0.420**	**0.520**	**0.140**	**0.200**	**0.270**	**0.350**	**0.450**	**0.570**	**0.114**	**0.152**	**0.089**
		0.0035	0.0059	0.0094	0.0126	0.0165	0.0205	0.0055	0.0079	0.0106	0.0138	0.0177	0.0224	0.0045	0.0060	0.0035
250	280	**0.100**	**0.170**	**0.260**	**0.350**	**0.460**	**0.570**	**0.150**	**0.220**	**0.300**	**0.390**	**0.490**	**0.620**	**0.114**	**0.165**	**0.102**
		0.0039	0.0067	0.0102	0.0138	0.0181	0.0224	0.0059	0.0087	0.0118	0.0154	0.0193	0.0244	0.0045	0.0065	0.0040
280	315	**0.110**	**0.190**	**0.280**	**0.370**	**0.500**	**0.630**	**0.170**	**0.240**	**0.330**	**0.430**	**0.540**	**0.680**	**0.127**	**0.178**	**0.102**
		0.0043	0.0075	0.0110	0.0146	0.0197	0.0248	0.0067	0.0094	0.0130	0.0169	0.0213	0.0268	0.0050	0.0070	0.0040
315	355	**0.120**	**0.200**	**0.310**	**0.410**	**0.550**	**0.690**	**0.190**	**0.270**	**0.360**	**0.470**	**0.590**	**0.740**	**0.140**	**0.190**	**0.114**
		0.0047	0.0079	0.0122	0.0161	0.0217	0.0272	0.0075	0.0106	0.0142	0.0185	0.0232	0.0291	0.0055	0.0075	0.0045
355	400	**0.130**	**0.220**	**0.340**	**0.450**	**0.600**	**0.750**	**0.210**	**0.300**	**0.400**	**0.520**	**0.650**	**0.820**	**0.152**	**0.203**	**0.127**
		0.0051	0.0087	0.0134	0.0177	0.0236	0.0295	0.0083	0.0118	0.0157	0.0205	0.0256	0.0323	0.0060	0.0080	0.0050
400	450	**0.140**	**0.240**	**0.370**	**0.500**	**0.660**	**0.820**	**0.230**	**0.330**	**0.440**	**0.570**	**0.720**	**0.910**	**0.165**	**0.216**	**0.152**
		0.0055	0.0094	0.0146	0.0197	0.0260	0.0323	0.0091	0.0130	0.0173	0.0224	0.0283	0.0358	0.0065	0.0085	0.0060
450	500	**0.140**	**0.260**	**0.410**	**0.550**	**0.720**	**0.900**	**0.260**	**0.370**	**0.490**	**0.630**	**0.790**	**1.000**	**0.178**	**0.229**	**0.165**
		0.0055	0.0102	0.0161	0.0217	0.0283	0.0354	0.0102	0.0146	0.0193	0.0248	0.0311	0.0394	0.0070	0.0090	0.0065
500	560	**0.150**	**0.280**	**0.440**	**0.600**	**0.780**	**1.000**	**0.290**	**0.410**	**0.540**	**0.680**	**0.870**	**1.100**	**0.203**	**0.254**	**0.178**
		0.0059	0.0110	0.0173	0.0236	0.0307	0.0394	0.0114	0.0161	0.0213	0.0268	0.0343	0.0433	0.0080	0.0100	0.0070
560	630	**0.170**	**0.310**	**0.480**	**0.650**	**0.850**	**1.100**	**0.320**	**0.460**	**0.600**	**0.760**	**0.980**	**1.230**	**0.229**	**0.279**	**0.203**
		0.0067	0.0122	0.0189	0.0256	0.0335	0.0433	0.0126	0.0181	0.0236	0.0299	0.0386	0.0484	0.0090	0.0110	0.0080
630	710	**0.190**	**0.350**	**0.530**	**0.700**	**0.920**	**1.190**	**0.350**	**0.510**	**0.670**	**0.850**	**1.090**	**1.360**	**0.254**	**0.305**	**0.203**
		0.0075	0.0138	0.0209	0.0276	0.0362	0.0469	0.0138	0.0201	0.0264	0.0335	0.0429	0.0535	0.0100	0.0120	0.0080
710	800	**0.210**	**0.390**	**0.580**	**0.770**	**1.010**	**1.300**	**0.390**	**0.570**	**0.750**	**0.960**	**1.220**	**1.500**	**0.279**	**0.356**	**0.229**
		0.0083	0.0154	0.0228	0.0303	0.0398	0.0512	0.0154	0.0224	0.0295	0.0378	0.0480	0.0591	0.0110	0.0140	0.0090
800	900	**0.230**	**0.430**	**0.650**	**0.860**	**1.120**	**1.440**	**0.440**	**0.640**	**0.840**	**1.070**	**1.370**	**1.690**	**0.305**	**0.381**	**0.252**
		0.0091	0.0169	0.0256	0.0339	0.0441	0.0567	0.0173	0.0252	0.0331	0.0421	0.0539	0.0665	0.0120	0.0150	0.0100
900	1000	**0.260**	**0.480**	**0.710**	**0.930**	**1.220**	**1.57**	**0.490**	**0.710**	**0.930**	**1.190**	**1.520**	**1.860**	**0.356**	**0.432**	**0.279**
		0.0102	0.0189	0.0280	0.0366	0.0480	0.0618	0.0193	0.0280	0.0366	0.0469	0.0598	0.0732	0.0140	0.0170	0.0110

Table 11.

[1]For bearings with normal initial clearance.

: For bearings with normal initial clearance.

Min./Max. values for each RIC are shown in the two adjacent columns directly beneath the selected RIC. Each single column represents a boundary between adjacent RIC's. For example, the maximum values shown for C5 are also the maximum values for C4; minimum values for C4 are also the maximum values for C3; etc.

NOTE: Special clearances can be provided (C6, C7, etc.)

A

MOUNTING DESIGNS - *continued*

EXAMPLE #1 – Calculating RIC Reduction Using a Spherical Roller Bearing with Tapered Bore

Given bearing number 22328K C3 (140 mm bore with C3 clearance) is to be mounted on a tapered shaft. Using a set of feeler gauges, RIC is found to be –

RIC = 0.178 mm (0.007 in.)

Suggested Reduction of RIC Due to Installation = 0.064 to 0.089 mm (0.0025 in. to 0.0035 in.), found in chart on page 51.

Calculate the clearance after mounting –

0.178 mm - 0.076 mm = 0.102 mm *or*

0.007 in. - 0.003 in. = 0.004 in.

Note: *For this example, the value of 0.076 mm (0.003 in.) was obtained by taking the mid-range value of the upper and lower limits found in the table on page 51.*

Therefore, the locknut should be tightened until RIC reaches 0.102 mm (0.004 in.).

It should also be noted that the value obtained by reading the Suggested RIC after Installation directly from the table is 0.056 mm (0.0022 in.). This differs from the value calculated in the above example. The value taken directly from the table is provided as a minimum value. It is not suggested to use a calculated value that falls below this minimum.

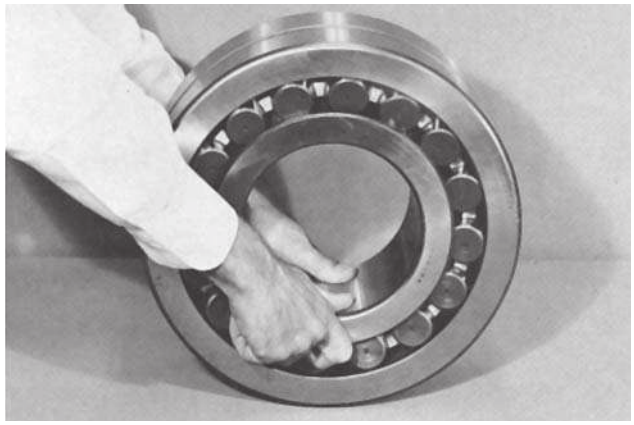

Mounting spherical roller bearing.

MOUNTING DESIGNS - *continued*

EXAMPLE #2 – Calculating RIC Reduction Using a Spherical Roller Bearing with Cylindrical Bore

Observations:

- Bearing 22230YM, nominal 150 mm (5.0955 in.) bore and 270 mm (10.6299 in.) O.D., standard class, operating at 1200 RPM.
- Float bearing position so the stationary O.D. should be free to move in housing, or loose fit.
- With shaft/inner ring rotation and the moderate loading 0.09C, the bore should be tight fit.

We can use the nominal fit charts on page 55 (Shaft Fit) and 56 (Housing Fit) to help guide our ISO fit selection.

Shaft Fit (page 55) at 150 mm Bore: ISO p6

From the shaft fit chart at 150 mm nominal bore at p6 (page 40), the shaft tolerance is Nominal +0.043 to +0.068 mm (+0.0017 to +0.0027 in.). Therefore we have the following bore range:

Max. Shaft = 150.068 mm (5.0955 in.)
Min. Shaft = 150.043 mm (5.0945 in.)

This yields a Shaft Fit:

Min. Fit = Min. Shaft – Max. Bore
= 150.043 – 150.000 = 0.043 mm (0.0017 in.) Tight

Max. Fit = Max. Shaft – Min. Bore
= 150.068 – 149.075 = 0.093 mm (0.0037 in.) Tight

Housing Fit (page 56) at 270 mm O.D.: ISO H8

From the housing fit chart at 270 mm nominal O.D. at H8 (page 43), the housing bore tolerance is Nominal +0.000 to +0.081 mm (+0.0000 in., +0.0032 in.). Therefore we have the following bore range:

Max. Housing Bore = 270.081 mm (10.6331 in.)
Min. Housing Bore = 270.000 mm (10.6299 in.)

This yields an O.D. Fit:

Min. Fit = Min. Housing Bore – Max. O.D. = 270.000 – 270.000
= 0.000 mm (0.0000 in.) Loose

Max. Fit = Max. Housing Bore – Min O.D. = 270.081 – 269.965
= 0.116 mm (0.0046 in.) Loose

DETERMINING PROPER RIC

For the primary selection of radial internal clearance, RIC, the major parameters are the bearing speed and the fits. For our example, we know that the shaft fit is 0.043 mm (0.0017 in.) tight to 0.093 mm (0.0037 in.) tight. We know the housing fit is line to 0.116 mm (0.0046 in.) loose. We also know that the bearing speed is 1200 RPM or 60 percent of the speed rating.

As a general rule of thumb, we bump the clearance up due to operating speeds that exceed 70% of the speed rating, due to concerns over internal heat generation and thermal growth. In this case, we are at 60 percent of the speed rating, so normal clearance, ISO C0 or C_{Normal}, can be selected.

Observing the RIC chart on page 51, we find for 150 mm nominal bore at C_{Normal} the RIC will be 0.110 mm to 0.170 mm (0.0043 in. to 0.0067 in.). We also note that the minimum recommended RIC (installed) is 0.056 mm (0.0022 in.).

Also from page 51, we note that we get an approximate reduction of RIC that is 80 percent of interference fit on a solid shaft and 60 percent of the OD interference fit in a steel or cast iron housing. Since we have a loose housing fit, there will be no RIC reduction from that fit.

Shaft Fit RIC Reductions and Clearance:

0.043 mm (0.0017 in.) tight = 0.034 mm (0.0014 in.) RIC reduction

0.093 mm (0.0037 in.) tight = 0.074 mm (0.0030 in.) RIC reduction

Max. Clearance = Max. RIC – Min. Fit Reduction
= 0.170 – 0.034 = 0.136 mm (0.0054 in.)

Min. Clearance = Min. RIC – Max. Fit Reduction
= 0.110 – 0.074 = 0.036 mm (0.0014 in.)

Since the minimum mounted clearance is less than the minimum suggested RIC of 0.056 mm (0.0022 in.), the C_{Normal} RIC clearance limit needs to be re-evaluated.

For a 150mm nominal bore at C3, the RIC will be 0.170 to 0.220 mm (0.0067 to 0.0087 in.). Recalculating shaft fit RIC reduction and clearance:

Max. Clearance = Max. RIC – Min. Fit Reduction
= 0.220 – 0.034 = 0.186 mm (0.0073 in.)

Min. Clearance = Min. RIC – Max. Fit Reduction
= 0.170 – 0.074 = 0.096 mm (0.0038 in.)

Since the Minimum mounted clearance is now greater than the minimum suggested RIC of 0.056 mm (0.0022 in.), the C3 RIC clearance limit is acceptable.

A

MOUNTING DESIGNS - *continued*

BEARING SHAFT AND HOUSING SEATS

Geometry

Under load, spherical roller bearings typically conform to the shape of the shaft and housing seats into which they are mounted. For example, seats of inner rings and/or outer rings that are machined out of round will cause the bearing rings to take this form and therefore impart error motion into the shaft. Therefore, the shaft and housing seats should be machined to at least the same precision as the bearing bore and O.D. respectively. Tolerances for the bearing bore and O.D. are listed in Tables 8 and 9.

SURFACE FINISHES – STANDARD BEARINGS

For industrial applications, please refer to the following guidelines:

Ground Shafts

All roller bearing shaft seats should be ground to a surface finish of 1.6 µm (65 µin) Ra maximum wherever possible.

Turned Shafts

When shaft seats are turned, a tighter fit should be used. In this case, the shaft diameter should be turned to a finish of 3.2 µm (125 µin) Ra maximum.

Housing Bores

Housing bores should be finished to 3.2 µm (125 µin) Ra maximum.

SHAFT AND HOUSING FITS

Fig. 20 is a graphical representation of shaft and housing fit selection for these bearings conforming to ANSI/ABMA standard 7. The bars designated by g6, h6 etc., represent shaft/housing diameter and tolerance ranges to achieve various loose and interference fits required for various load and ring rotation conditions.

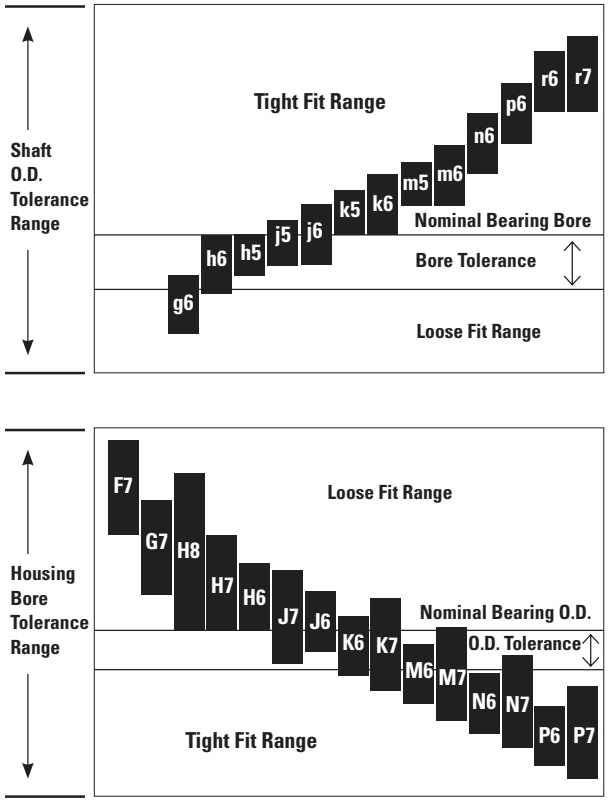

Fig. 20. Graphical representation of shaft and housing fits.

SHAFT AND HOUSING FITS - *continued*

RADIAL SPHERICAL ROLLER BEARINGS

These charts are guidelines for specifying shaft (Table 12) and housing (Table 14) fits related to particular operating conditions.

SHAFT						
Conditions		Examples	Shaft Diameter mm		Tolerance Symbol[1]	Remarks
Stationary inner ring load	The inner ring to be easily displaced on the shaft (float)	Two-bearing shaft mechanism	See table below for shaft size		s4	
	The inner ring not to be easily displaced on the shaft (fixed)	Wheel on non-rotating shaft	All diameters		g6	
		Tension pulleys and rope sheaves			h6	
Rotating inner ring load or indeterminate load direction	Light and variable loads P ≤ 0.07C	Electrical apparatus, machine tools, pumps, ventilators, industrial trucks	over	incl.		In very accurate applications k5 and m5 are used instead of k6 and m6 respectively.
			18	100	k6	
			100	200	m6	
	Normal and heavy loads P > 0.07C ≤ 0.25C	Applications in general, electrical motors, turbines, pumps, combustion engines, gear transmissions, wood-working machines	18	65	m5	
			65	100	m6	
			100	140	n6	
			140	280	p6	
			280	500	r6	
			500	and up	r7	
	Very heavy loads and shock loads P > 0.25C	Journal boxes for locomotives and other heavy rail vehicles, traction motors	18	65	m6	Bearings with greater clearance than normal must be used.
			65	100	n6	
			100	140	p6	
			140	200	r6	
			200	500	r7	
Bearings with Tapered Bore and Adapter Sleeve	All loads	Applications in general	All diameters			See tables for Reduction of RIC on page 51.

Table 12. Suggested shaft fitting practice for spherical roller bearings.

[1] See Tables on pages 34-41 for numerical values

FITTING PRACTICES

s4 FITS

A centrifugal force load produces a rotating outer ring load and a stationary inner ring load, even though the inner ring rotates. This makes it desirable to fit the outer ring tight in the housing (using a P6 fit as shown on pages 34-49), and the inner ring loose on the shaft using an s4 fit as listed in the table. The standard W33 bearing with oil groove and oil holes can be used.

HOLLOW SHAFTS

In case of a thin section hollow shaft, the fits mentioned in the tables for industrial applications should be increased to avoid possible inner ring creeping under some load conditions. Consult your Timken representative for more information.

Note: *The s4 fit designation as referenced on this page is a special fit tolerance developed by The Timken Company for this specific application. It DOES NOT conform to ISO standards similarly published as s4 preferred shaft fits.*

s4 FITS					
Data shown in thousandths of a millimeter (15=0.015 mm) or ten-thousandths of an inch (6=.0006"). See dimensional tables for nominal bore.					
Bore		Variance from Nominal Bore			
mm		Tolerance	Shaft Diameter		Fit
over	incl.	+0	Max.	Min.	
		mm in.	mm in.	mm in.	mm in.
50	80	-15	-25	-36	10L 36L
		-6	-10	-14	4L 14L
80	120	-20	-33	-43	13L 43L
		-8	-13	-17	5L 17L
120	180	-25	-41	-53	15L 53L
		-10	-16	-21	6L 21L
180	250	-30	-48	-64	18L 64L
		-12	-19	-25	7L 25L

Table 13. Timken developed s4 fit designations.

A

FITTING PRACTICES - *continued*

SHAFT AND HOUSING FITS

Radial Spherical Roller Bearings

These charts are guidelines for specifying shaft and housing fits related to particular operating conditions.

HOUSING					
Conditions			Examples	Tolerance Symbol[1]	Remarks
One-piece bearing housing	Rotating outer ring load	Variable load direction	Two-bearing eccentric shaft mechanism	P6	The outer ring is not displaceable axially
		Heavy loads on bearings in thin walled housings	Supporting wheels in cranes, wheel hubs, crank bearings	P7	
		Normal and heavy loads	Wheel hubs, crank bearings	N7	
		Light and variable loads	Conveyor rollers, rope sheaves, tension pulleys	M7	
	Indeterminate load direction	Heavy shock loads	Electrical traction motors		
		Heavy and normal loads, axial displacement of outer ring not required	Electrical motors, pumps, crankshaft main bearings	K7	The outer ring is, as a rule, not displaceable axially.
Split or one-piece bearing housing		Normal and light loads, axial displacement of the outer ring desirable	Electrical motors, pumps, crankshaft main bearings	J7	The outer ring is, as a rule, displaceable axially.
	Stationary outer ring load	Shock loads, temporarily complete unloading.	Journal boxes for rail vehicles		
		All loads	Bearing applications in general, journal boxes for rail vehicles	H7	The outer ring is easily displaced axially.
		Normal and light loads, loads under simple operating conditions	Line shaftings	H8	
		Heat supplied through the shaft	Dryer cylinders	G7	
One-piece bearing housing	Applications requiring particular accuracy	Very accurate running and small deflections under variable loads	For main spindles in machine tools: O.D. less than 125 mm; O.D. 125 to 250 mm; O.D. over 250 mm	M6; N6; P6	The outer ring is not displaceable axially.
		Very accurate running under light loads and indeterminate load direction	Held bearings in high speed centrifugal force compressors	K6	The outer ring is, as a rule, not displaceable axially.
		Very accurate running, axial displacement of outer ring desirable	Floating bearings in high speed centrifugal force compressors	J6	The outer ring is easily displaced axially.

Table 14. Suggested housing fitting practice for spherical roller bearings.

[1] Cast iron or steel housing. For numerical values see tables on pages 42-49.
For housings of aluminum / magnesium , tolerances generally are selected which give a slightly tighter fit than those given in the table.

NON FERROUS HOUSINGS

Care should be taken when pressing outer rings into aluminum or magnesium housings to avoid metal pick up. This may result in unsatisfactory fits, backing, and alignment from debris trapped between the outer rings and backing shoulder. Preferably, the outer rings should be cooled or the housing heated, or both, during assembly. Also, a special lubricant may be used to ease assembly. In some cases, outer rings are mounted in steel inserts that are attached to the aluminum or magnesium housings. Table fits may then be used. Consult your Timken representative for more information.

CAUTION: *Failure to use the specified fits may result in improper bearing setting. Reduced bearing performance or malfunction may occur. This may cause damage to machinery in which the bearing is a component. If interference fits are either greater or less than those specified, the mounted bearing setting will be other than intended.*

LUBRICATION AND SEALS

LUBRICATION

To help maintain a rolling bearing's anti-friction characteristics, lubrication is needed to:

- Minimize rolling resistance due to deformation of the rolling elements and raceway under load by separating the mating surfaces.
- Minimize sliding friction occurring between rolling elements, raceways and cage.
- Transfer heat (with oil lubrication).
- Protect from corrosion and, with grease lubrication, from contaminant ingress.

Modern lubricants do this very effectively, although in many applications the means by which they accomplish this are extremely complex and not completely understood. Because the principles involved with lubricating rolling element bearings are complex and do not have to be known to employ lubricants successfully, this discussion will stress the practical rather than the theoretical aspects of lubrication.

LUBRICATION SELECTION

The wide range of bearing types and operating conditions precludes any simple, all-inclusive statement or guideline for the selection of the proper lubricant. At the design level, the first consideration is whether oil or grease is best for the particular operation. The advantages of oil and grease are outlined in the table below. When heat must be carried away from the bearing, oil must be used. It is nearly always preferred for very high speed applications. For speed ratings of grease and oil-lubricated bearings, refer to the section entitled "Speed, Heat and Torque."

ADVANTAGES OF OIL AND GREASE	
OIL	**GREASE**
Carries heat away from the bearings	Simplifies seal design and acts as a sealant
Carries away moisture and particulate matter	Permits prelubrication of sealed or shielded bearings
Easily controlled lubrication	Generally requires less frequent lubrication

Table 15.

LUBRICANT ADDITIVES

Additives are materials, usually chemicals, that improve specific properties when added to lubricants. Additives, when properly formulated into a lubricant, can increase lubricant life, provide greater resistance to corrosion, increase load-carrying capacity and enhance other properties. Additives are very complex and should not be added indiscriminately to lubricants as a cure-all for lubrication problems.

The more common lubricant additives include:

- Oxidation inhibitors for increasing lubricant service life.
- Rust or corrosion inhibitors to protect surfaces from rust or corrosion.
- Demulsifiers to promote oil and water separation.
- Viscosity-index improvers to decrease viscosity sensitivity to temperature change.
- Pour-point depressants to lower the pouring point at low temperatures.
- Lubricity agents to modify friction.
- Antiwear agents to retard wear.
- Extreme pressure (EP) additives to prevent scoring under boundary-lubrication conditions.
- Detergents and dispersants to maintain cleanliness.
- Antifoam agents to reduce foam.
- Tackiness agents to improve adhesive properties.

Inorganic additives such as molybdenum disulphide, graphite, and zinc oxide are sometimes included in lubricants. In most roller bearing applications, inorganic additives are of no significant benefit; conversely, as long as the concentration is low and the particle size small, they are not harmful.

Recently, the effects of lubricant chemistry on bearing life (as opposed to the purely physical characteristics) have received much emphasis. Rust, oxidation, extreme pressure and anti-wear additive packages are widely used in engine and gear oils. Fatigue testing has shown these additives may, depending on their chemical formulation, concentration and operating temperature, have a positive or negative impact on bearing life.

Consult your Timken representative for more information regarding lubricant additives.

GUIDANCE FOR OIL/GREASE SELECTION

Oil Lubrication

Oils used for bearing lubrication should be high-quality, non-oxidizing mineral oils or synthetic oils with similar properties. Selection of the proper type of oils depends on bearing speed, load, operating temperature and method of lubrication.

Some features and advantages of oil lubrication, in addition to the above, are as follows:

- Oil is a better lubricant for high speeds or high temperatures. It can be cooled to help reduce bearing temperature.
- With oil, it is easier to handle and control the amount of lubricant reaching the bearing. It is harder to retain in the bearing. Lubricant losses may be higher than with grease.
- As a liquid, oil can be introduced to the bearing in many ways, such as drip-feed, wick-feed, pressurized circulating systems, oil-bath or air-oil mist. Each is suited to certain types of applications.
- Oil is easier to keep clean for recirculating systems.
- Oil may be introduced to the bearing housing in many ways.

A

LUBRICATION AND SEALS - *continued*

The most common systems are:

- **Oil Bath.**

  The housing is designed to provide a sump through which the rolling elements of the bearing will pass. Generally, the oil level should be no higher than the center point of the lowest rolling element. If speed is high, lower oil levels should be used to reduce churning. Gages or controlled elevation drains are used to achieve and maintain the proper oil level.

- **Circulating System.**

  This system has the advantages of:
  - An adequate supply of oil for both cooling and lubrication.
  - Metered control of the quantity of oil delivered to each bearing.
  - Removal of contaminants and moisture from the bearing by flushing action.
  - Suitability for multiple bearing installations.
  - Large reservoir, which reduces deterioration. Increased lubricant life provides economic efficiency.
  - Incorporation of oil filtering devices.
  - Positive control to deliver the lubricant where needed.

  A typical circulating oil system consists of an oil reservoir, pump, piping and filter. A cooler may be required.

- **Oil-Mist Lubrication.**

  Oil-mist lubrication systems are used in high-speed, continuous operation applications. This system permits close control of the amount of lubricant reaching the bearings. The oil may be metered, atomized by compressed air and mixed with air, or it may be picked up from a reservoir using a venturi effect. In any case, the air is filtered and supplied under sufficient pressure to assure adequate lubrication of the bearings. Control of this type of lubrication system is accomplished by monitoring the operating temperatures of the bearings being lubricated. The continuous passage of the pressurized air and oil through the labyrinth seals used in the system prevents the entrance of contaminants from the atmosphere to the system.

  The successful operation of this type of system is based upon the following factors: proper location of the lubricant entry ports in relation to the bearings being lubricated, avoidance of excessive pressure drops across void spaces within the system, the proper air pressure and oil quantity ratio to suit the particular application, and the adequate exhaust of the air-oil mist after lubrication has been accomplished. To ensure "wetting" of the bearings and to prevent possible damage to the rolling elements and races, it is imperative that the oil mist system be turned on for several minutes before the equipment is started. The importance of "wetting" the bearing before starting cannot be overstated and has particular significance for equipment that has been idled for extended periods of time.

OIL LUBRICATION GUIDELINES

Oil Lubrication

Lubricating oils are commercially available in many forms for automotive, industrial, aircraft and other uses. Oils are classified as either petroleum types (refined from crude oil) or synthetic types (produced by chemical synthesis).

Petroleum Oils

Petroleum oils are used for nearly all oil-lubricated applications of Timken bearings. These oils have physical and chemical properties that can help in the selection of the correct oil for any bearing application.

Synthetic Oils

Synthetic oils cover a broad range of categories and include polyalphaolefins, silicones, polyglycols, and various esters. In general, synthetic oils are less prone to oxidation and can operate at extreme hot or cold temperatures. physical properties, such as pressure-viscosity coefficients, tend to vary between oil types and caution should be used when making oil selections.

The polyalphaolefins (PAO) have a hydrocarbon chemistry, which parallel petroleum oil both in their chemical structures and pressure-viscosity coefficients. Therefore, PAO oil is mostly used in the oil-lubricated applications of Timken bearings when severe temperature environments (hot and cold) are encountered or when extended lubricant life is required. The silicone, ester and polyglycol oils have an oxygen based chemistry that is structurally quite different from petroleum oils and PAO oils. This difference has a profound effect on its physical properties where pressure-viscosity coefficents can be lower compared to mineral and PAO oils. This means that these types of synthetic oils may actually generate a smaller EHD film thickness than a mineral or PAO oil of equal viscosity at operating temperature. Reductions in bearing fatigue life and increases in bearing wear could result from this reduction of lubricant film thickness.

Selection of Oils

The selection of oil viscosity for any bearing application requires consideration of several factors: load, speed, internal clearance, type of oil, and environmental factors. Since viscosity varies inversely with temperature, a viscosity value must always be stated with the temperature at which it was determined. High viscosity oil is used for low-speed or high-ambient temperature applications. Low viscosity oil is used for high-speed or low-ambient temperature applications.

LUBRICATION AND SEALS - *continued*

CLASSIFICATION

There are several classifications of oils based on viscosity grades. The most familiar are the Society of Automotive Engineers (SAE) classifications for automotive engine and gear oils. The American Society for Testing and Materials (ASTM) and the International Organization for Standardization (ISO) have adopted standard viscosity grades for industrial fluids. Fig. 21 shows the viscosity comparisons of ISO/ASTM with SAE classification systems at 40° C (104° F).

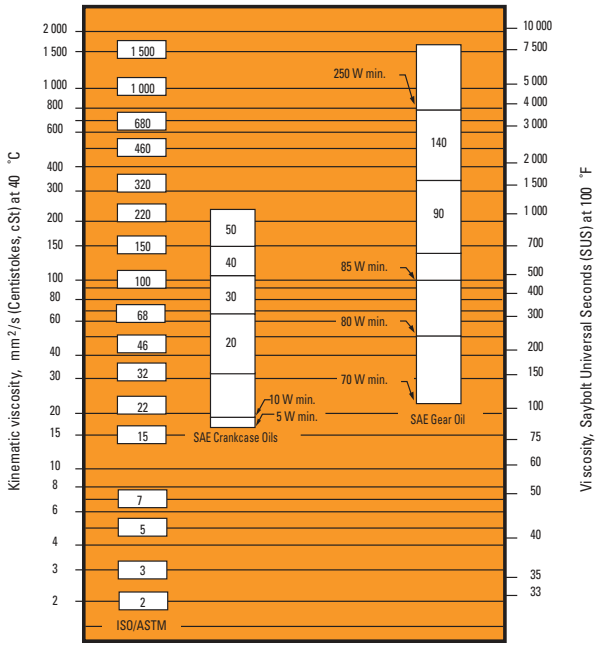

Fig. 21.
Viscosity classification comparison between ISO/ASTM grades (ISO 3448/ ASTM D2442) and SAE grades (SAE J 300-80 for crankcase oils, SAE J 306-81 for axle and manual transmission oils).

TEMPERATURE VS. KINEMATIC VISCOSITY

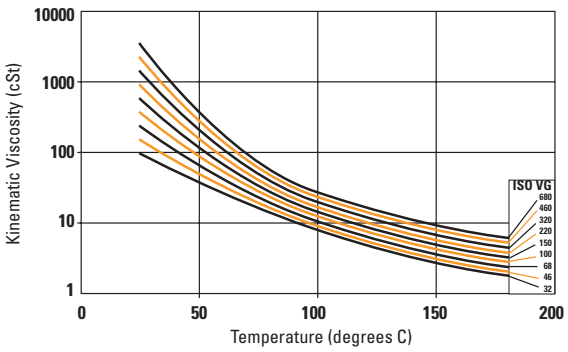

Fig. 22.
This figure can be used to predict the oil's kinematic viscosity versus temperature (use base oil for grease).

TYPICAL OIL LUBRICATION GUIDELINES

In this section, the properties and characteristics of lubricants for typical roller bearing applications are listed. These general characteristics have resulted from long, successful performance in these applications.

General Purpose Rust and Oxidation Lubricating Oil

General purpose rust and oxidation (R&O) inhibited oils are the most common type of industrial lubricant. They are used to lubricate Timken bearings in all types of industrial applications where conditions requiring special considerations do not exist.

SUGGESTED GENERAL PURPOSE R&O LUBRICATING OIL PROPERTIES	
Base stock	Solvent refined, high viscosity-index petroleum oil
Additives	Corrosion and oxidation inhibitors
Viscosity index	80 min.
Pour point	-10° C (14° F) max.
Viscosity grades	ISO/ ASTM 32 through 220

Table 16.

Some low-speed and/or high-ambient temperature applications require the higher viscosity grades, and high-speed and/or low-temperature applications require the lower viscosity grades.

INDUSTRIAL EXTREME PRESSURE (EP) GEAR OIL

Extreme pressure gear oils are used to lubricate Timken bearings in all types of heavily loaded industrial equipment. They should be capable of withstanding heavy loads including abnormal shock loads common in heavy-duty equipment.

SUGGESTED INDUSTRIAL EP GEAR OIL PROPERTIES	
Base stock	Solvent refined, high viscosity index petroleum oil
Additives	Corrosion and oxidation inhibitors. Extreme pressure (EP) additive* - 15.8 kg (35 lb) min. "OK" Timken load rating
Viscosity index	80 Min.
Pour point	-10° C (14° F) Max.
Viscosity grades	ISO/ ASTM 100, 150, 220, 320, 460

* ASTM D 2782

Table 17.

Industrial EP gear oils should be composed of a highly refined petroleum oil-based stock plus appropriate inhibitors and additives. They should not contain materials that are corrosive or abrasive to bearings. The inhibitors should provide long-term protection from oxidation and protect the bearing from corrosion in the presence of moisture. The oils should resist foaming in service and have good water separation properties. An EP additive protects against scoring under boundary-lubrication conditions. The viscosity grades suggested represent a wide range. High temperature and/ or slow-speed applications generally require the higher viscosity grades. Low temperatures and/or high speeds require the use of lower viscosity grades.

A

LUBRICATION AND SEALS - *continued*

LUBRICATING GREASES

Definition

According to the ASTM definition, lubricating grease is a "solid to semi-fluid product of the dispersion of a thickening agent in a liquid lubricant; other ingredients imparting special properties may be included." If this definition were applied in the manner a chemist would use to illustrate a chemical reaction, the composition of a grease could be described by the formula below.

Fluids	+Thickening Agents	+Special Ingredients	=Lubricating Grease
Mineral Oils	Soaps	Oxidation Inhibitors	
Esters	Lithium, Sodium	Rust Inhibitors	
Organic	Barium, Calcium	VI Improver	
Esters	Strontium	Tackiness	
Glycols	Non-Soap (Inorganic)	Perfumes	
Silicones	Microgel (Clay)	Dyes	
	Carbon Black	Metal Deactivator	
	Silica-gel		
	Non-Soap (Organic)		
	Urea compounds		
	Terepthlamate		
	Organic Dyes		

Table 18.

At this time, there is no known universal anti-friction bearing grease. Each individual grease has certain limiting properties and characteristics.

Synthetic lubricating fluids, such as esters, organic esters and silicones, are used with conventional thickeners or chemical additives to provide greases capable of performing over an extremely wide range of temperatures, from as low as -73° C (-100° F) to a high of 288° C (550° F).

The successful use of lubricating grease in roller bearings depends on the physical and chemical properties of the lubricant pertaining to the bearing, its application, installation and general environmental factors. Because the choice of a lubricating grease for a particular bearing under certain service conditions is often difficult to make, your Timken representative should be consulted for proper suggestions.

Grease Lubrication

The simplest lubrication system for any bearing application is grease. Conventionally, greases used in Timken bearing applications are petroleum oils of some specific viscosity that are thickened to the desired consistency by some form of metallic soap. Greases are available in many soap types such as sodium, calcium, lithium, calcium-complex and aluminium-complex. Organic and inorganic type non-soap thickeners also are used in some products.

Soap Type

Calcium greases have good water resistance. Sodium greases generally have good stability and will operate at higher temperatures, but they absorb water and cannot be used where moisture is present. Lithium, calcium-complex and aluminium-complex greases generally combine the higher temperature properties and stability of sodium grease with the water resistance of calcium grease. These greases are often referred to as multi-purpose greases since they combine the two most important lubricant advantages into one product.

Characteristics and Operating Environments

Listed below are the general characteristics of prominent roller bearing greases.

Thickener	Typical Dropping PT C	Typical Dropping PT F	Usable** Temperature C	Usable** Temperature F	Typical Water Resistance
Sodium Soap	260+	500+	121	250	Poor
Lithium Soap	193	380	104	220	Good
Polyurea	238	460	149	300	Excellent
Lithium Complex Soap	260+	500+	163	325	Good

Table 19.

NOTE: The properties of a grease may vary considerably depending on the particular oil, thickener and additives used in the formulation.

** Continuous operation with no relubrication. Depending upon the formulation the service limits may vary. The usable limit can be extended significantly with relubrication.

Polyurea as a thickener for lubricating fluids is one of the most significant lubrication developments in more than 30 years. Polyurea grease performance in a wide range of bearing applications is outstanding, and in a relatively short time it has gained acceptance as a factory-packed lubricant for ball bearings.

Consistency

Greases may vary in consistency from semifluids hardly thicker than a viscous oil, to solid grades almost as hard as a soft wood.

Consistency is measured by a pentrometer, in which a standard weighted cone is dropped into the grease. The distance the cone penetrates (measured in tenths of a millimeter in a specific time) is the penetration number.

The National Lubricating Grease Institute (N.L.G.I.) classification of grease consistency is shown below:

NLGI Grease Grades	Penetration Number
0	355-385
1	310-340
2	265-295
3	220-250
4	175-205
5	130-160
6	85-115

Table 20.

Grease consistency is not fixed; it normally becomes softer when sheared or "worked." In the laboratory this "working" is accomplished by forcing a perforated plate up and down through a closed container of grease. This "working" does not compare with the violent shearing action that takes place in a ball bearing and does not necessarily correlate with actual performance.

LUBRICATION AND SEALS - *continued*

Low Temperatures

Starting torque in a grease-lubricated bearing at low temperatures can be critical. Some greases may function adequately as long as the bearing is operating, but resistance to initial movement is such that the starting torque is excessive. In certain smaller machines, starting is an impossibility when very cold. Under such operating circumstances, the greases containing low-temperature characteristic oils are generally required.

If the operating temperature range is wide, synthetic fluid greases offer definite advantages. Greases are available to provide very low starting and running torque at temperatures as low as -73° C (-100° F). In certain instances, these greases perform better in this respect than oil.

An important point concerning lubricating greases is that the starting torque is not necessarily a function of the consistency or the channel properties of the grease. It appears to be more a function of the individual properties of the particular grease and is difficult to measure. Experience alone will indicate whether one grease is superior to another.

High Temperatures

The high temperature limit for modern grease is generally a function of the thermal and oxidation stability of the fluid and the effectiveness of the oxidation inhibitors. Fig. 23 was prepared using military-specification greases to illustrate the thermal limitations of mineral oil, ester, silicone, and flouronated ether greases. The limits as shown apply only to prelubricated bearings or to applications where relubrication is not possible. Where provisions have been made for relubrication, the temperature limits may be extended provided the interval between cycles is reduced accordingly.

A rule of thumb, developed from years of testing grease-lubricated bearings, indicates that grease life is halved for every 10° C (18° F) increase in temperature. For example, if a particular grease is providing 2000 hours of life at 90° C (194° F) raising the temperature to 100° C (212° F) reduction in life to approximately 1000 hours would result. On the other hand, 4000 hours could be expected by lowering the temperature to 80° C (176° F).

It becomes obvious that the reactions started by the normal reaction of lubricant with oxygen increases rapidly at higher temperatures. The lubricants undergo a series of chemical reactions that ultimately result in the development of viscous or hard residues that interfere with the operation of the bearing.

Thermal stability, oxidation resistance, and temperature limitations must be considered when selecting greases for high-temperature applications. In non-relubricatable applications, highly refined mineral oils or chemically stable synthetic fluids are required as the oil component of greases for operation at temperatures above 121° C (250° F).

Approximate Temperature Limits For Grease Thickeners

Soaps	121° C	250° F
Complexes	177° C	350° F
Polyureas	177° C	350° F
Non-soap	>260° C	>500° F

Table 21.

Timken Multi-Use Lithium Grease

Soap Type:	Lithium 12-hydroxystearate
Consistency:	NLGI No.1 or No. 2
Additives:	Corrosion and oxidation inhibitors
Base Oil:	Solvent refined petroleum or mineral oil
Viscosity at 40° C:	145.6 cSt
Viscosity Index:	80 min.
Pour Point:	-18° C max.
Color:	Light Brown

Table 22.

LUBRICATION GREASE TEMPERATURE RANGES

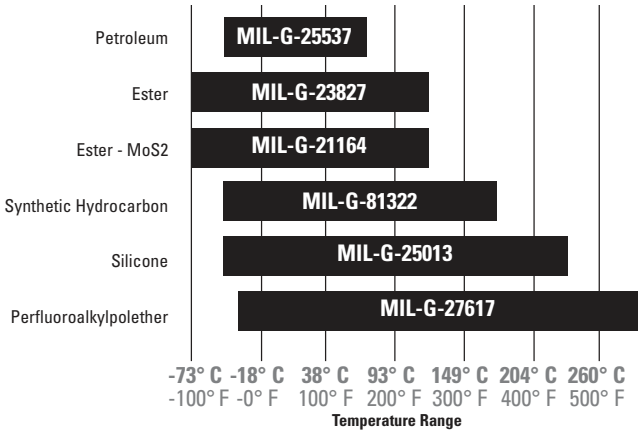

Fig. 23.

A

LUBRICATION AND SEALS - *continued*

Grease Compatibility Chart

■ = *Best Choice*
■ = *Compatible*
■ = *Borderline*
■ = *Incompatible*

	Al Complex	*Ba Complex*	*Ca Stearate*	*Ca 12 Hydroxy*	*Ca Complex*	*Ca Sulfonate*	*Clay Non-Soap*	*Li Stearate*	*Li 12 Hydroxy*	*Li Complex*	*Polyurea*	*Polyurea S S*
Aluminum Complex	■	■	■	■	■	■	■	■	■	■	■	■
Timken Food Safe	■	■	■	■	■	■	■	■	■	■	■	■
Barium Complex	■	■	■	■	■	■	■	■	■	■	■	■
Calcium Stearate	■	■	■	■	■	■	■	■	■	■	■	■
Calcium 12 Hydroxy	■	■	■	■	■	■	■	■	■	■	■	■
Calcium Complex	■	■	■	■	■	■	■	■	■	■	■	■
Calcium Sulfonate	■	■	■	■	■	■	■	■	■	■	■	■
Timken Premium Mill **Timken Heavy Duty Moly**	■	■	■	■	■	■	■	■	■	■	■	■
Clay Non-Soap	■	■	■	■	■	■	■	■	■	■	■	■
Lithium Stearate	■	■	■	■	■	■	■	■	■	■	■	■
Lithium 12 Hydroxy	■	■	■	■	■	■	■	■	■	■	■	■
Lithium Complex	■	■	■	■	■	■	■	■	■	■	■	■
Polyurea Conventional	■	■	■	■	■	■	■	■	■	■	■	■
Polyurea Shear Stable	■	■	■	■	■	■	■	■	■	■	■	■
Timken Multi-Use	■	■	■	■	■	■	■	■	■	■	■	■
Timken All Purpose **Timken Premium Synthetic**	■	■	■	■	■	■	■	■	■	■	■	■
Timken High Speed	■	■	■	■	■	■	■	■	■	■	■	■
Timken Pillow Block	■	■	■	■	■	■	■	■	■	■	■	■

Table 23.

WARNING

Mixing grease types can cause the lubricant to become ineffective, which can result in equipment failure, creating a risk of serious bodily harm.

LUBRICATION AND SEALS - *continued*

WET CONDITIONS

Water and moisture can be particularly conducive to bearing damage. Lubricating greases may provide a measure of protection from this contamination. Certain greases - the calcium, lithium and non-soap type, for example - are highly water-resistant. However, these greases exhibit poor rust preventative characteristics unless properly inhibited.

Sodium-soap greases emulsify with small amounts of moisture that may be present and prevent the moisture from coming in contact with the bearing surfaces. In certain applications, this characteristic may be advantageous; however, emulsions are generally considered undesirable.

Many bearing applications require lubricants with special properties or lubricants formulated specifically for certain environments, such as:

- Friction Oxidation (Fretting Corrosion)
- Chemical and Solvent Resistance
- Food Handling
- Quiet Running
- Space and/or Vacuum
- Electrical Conductivity

For assistance with these or other areas requiring special lubricants, consult your Timken representative.

CONTAMINATION

Abrasive Particles

When roller bearings operate in a clean environment, the primary cause of damage is the eventual fatigue of the surfaces where rolling contact occurs. However, when particle contamination enters the bearing system, it is likely to cause damage such as bruising, which can shorten bearing life.

When dirt from the environment or metallic wear debris from some component in the application is allowed to contaminate the lubricant, wear can become the predominant cause of bearing damage. If, due to particle contamination of the lubricant, bearing wear becomes significant, changes will occur to critical bearing dimensions that could adversely affect machine operation.

Bearings operating in a contaminated lubricant exhibit a higher initial rate of wear than those not running in a contaminated lubricant. But, with no further contaminant ingress, this wear rate quickly diminishes as the contamination particles are reduced in size as they pass through the bearing contact area during normal operation.

Water

Either dissolved or suspended water in lubricating oils can exert a detrimental influence on bearing fatigue life. Water can cause bearing etching that also can reduce bearing fatigue life. The exact mechanism by which water lowers fatigue life is not fully understood. It has been suggested that water enters microcracks in the bearing races that are caused by repeated stress cycles. This leads to corrosion and hydrogen embrittlement in the microcracks, reducing the time required for these cracks to propagate to an unacceptable size spall.

Water-base fluids such as water glycol and invert emulsions also have shown a reduction in bearing fatigue life. Although water from these sources is not the same as contamination, the results support the previous discussion concerning water-contaminated lubricants.

A

LUBRICATION AND SEALS - *continued*

GREASES

Applications and Lubricating Methods

Grease lubrication is generally applicable to the following conditions, and features low-to-moderate speed applications within operating temperature limits of the grease:

- Easily confined in the housing. This is important in the food, textile and chemical industries.
- Bearing enclosure and seal design simplified.
- Improves the efficiency of external mechanical seals to give better protection to the bearing.
- Successfully used for integrally-sealed, prelubricated ball bearings.

Advantages of Prelubricated Bearings

Prelubricated shielded and sealed bearings are extensively used with much success in applications where:

- Grease might be injurious to other parts of the mechanism.
- Cost and space limitations preclude the use of a grease-filled housing.
- Housings cannot be kept free of dirt and grit, water or other contaminants.
- Relubrication is impossible or hazardous

Prelubricated Timken bearings are prepacked with greases that have chemical and mechanical stability and have demonstrated long life characteristics in rotating bearings. Greases are filtered several times to remove all harmful material and accurately metered so that each bearing receives the proper amount of grease.

GREASE LUBRICATIONS FOR BEARING / HOUSING ASSEMBLIES

Polyurea and lithium-based greases are normally preferred for general purpose bearing lubrication and are advantageous in high moisture applications. Both greases have good water-resistant characteristics. For temperature ranges of standard greases, see chart on page 61.

The grease must be carefully selected with regard to its consistency at operating temperature. It should not exhibit thickening, separation of oil, acid formation or hardening to any marked degree. It should be smooth, non-fibrous and entirely free from chemically active ingredients. Its melting point should be considerably higher than the operating temperature.

Frictional torque is influenced by the quantity and the quality of lubricant present. Excessive quantities of grease cause churning. This results in excessive temperatures, separation of the grease components, and breakdown in lubrication values. In normal speed applications, the housings should be kept approximately one-third to one-half full.

Only on low-speed applications may the housing be entirely filled with grease. This method of lubrication is a safeguard against the entry of foreign matter, where sealing provisions are inadequate for exclusion of contaminants or moisture.

During periods of non-operation, it is often wise to completely fill the housings with grease to protect the bearing surfaces. Prior to subsequent operation, the excess grease should be removed and the proper level restored.

Applications utilizing grease lubrication should have a grease fitting and a vent at opposite ends of the housing near the top. A drain plug should be located near the bottom of the housing to allow purging of the old grease from the bearing.

Relubricate at regular intervals to prevent damage to the bearing. Relubrication intervals are difficult to determine. If plant practice or experience with other applications is not available, consult your lubricant supplier.

LUBRICATION AND SEALS - *continued*

MULTI-PURPOSE INDUSTRIAL GREASE

These are typical of greases that can be used to lubricate many Timken bearing applications in all types of standard equipment. Special consideration should be given to applications where speed, load, temperature or environmental conditions are extreme.

Suggested Lithium Soap, Lithium Complex, and Calcium Sulfonate Grease Properties

Thickener type	Lithium Complex, or equivalent
Consistency	NLGI No.1 or No. 2
Additives	Anti-wear, corrosion and oxidation inhibitors
Base oil	Mineral oil or synthetic
Viscosity at 40° C	ISO VG 150-220
Viscosity index	80 min.
Pour point	-18° C max.

Lithium greases, Lithium Complex Greases, or Calcium Sulfonate thickened grease are suitable for most centralized, Single Point, or manual lubricated product. They should be a smooth, homogeneous and uniform, premium-quality product composed of mineral or synthetic oil, a thickener, and appropriate inhibitors. It should not contain materials that are corrosive or abrasive to roller bearings. The grease should have excellent mechanical and chemical stability. The grease should contain inhibitors to provide long-term protection against oxidation in high-performance applications and protect the bearings from corrosion in the presence of moisture.

The suggested base oil viscosity covers a fairly wide range. Lower viscosity products should be used in high-speed and/or lightly loaded applications to minimize heat generation and torque. Higher viscosity products should be used in moderate- to low-speed applications and under heavy loads to maximize lubricant film thickness. Speed ratings are listed for each size/class part number in the Spherical Roller Bearing section (pages 80 to 96) of the catalog. When speeds of application exceed 70% of grease speed rating, consider increasing RIC by one ISO clearance range (C_{Normal} to C3).

Never mix greases (type or manufacturer). Incompatibility can inhibit proper lubrication. Table 23 on page 62 is provided as a reference for typical grease thickener compatibilities. Consult your lubricant supplier for further information for your specific requirement. For general industrial applications consider a grease that is NLGI No. 1 or No. 2, with a ISO 150 to 220 viscosity grade.

Application Considerations

For higher speed applications (operating at 75 percent of the grease speed rating or more), a grease with a lighter base oil viscosity (ISO100-150) can be considered. Conversely, for lower speed applications, a grease with a heavier base oil viscosity (ISO 320-460) can be considered.

For lower speed applications operating at colder start up temperatures (<0 °F), consider a softer grease (NLGI grade 1) with an approved EP additive. The lighter grade will allow more grease flow into the bearing contact area and the EP additive will reduce wear during startup. An ISO 460 base oil viscosity can also be considered.

When lower speed applications operate at higher temperatures (>300 °F), consult a local Timken sales representative.

Grease Fill

For normal industrial applications, fill the bearing void to 70 to 100 percent full and the housing void to 50 percent full. For high speed applications, fill the bearing void to 30 to 70 percent full and the housing void to 33 percent full. The free volume of the bearing can be estimated by first calculating the "solid ring" volume of the bearing. Then, weigh the bearing and divide the weight by the density of steel. This "actual" volume can then be subtracted from the "solid ring" volume. The resultant value is an estimate of the free volume of the bearing available for grease fill. When the grease volume is determined for the application, multiplying this value by the density of the grease will yield the approximate weight of the grease fill. After weighing the grease required, apply approximately 75 percent of the amount into the cage and roller assembly. The remaining amount of grease should then be applied to both inner and outer rings in equal amounts.

The preservatives applied to bearing components are compatible with nearly all industrial greases: and should not be wiped or cleaned prior to packing the bearing. If in doubt, contact a local Timken sales representative.

Re-Greasing Cycle

The two primary considerations that determine the re-greasing cycle on any application are operating temperature and sealing efficiency. Obviously, seal leakage will dictate frequent relubrication. Every attempt should be made to maintain seals at peak efficiency. Generally the higher the temperature, the more rapidly the grease oxidizes. Grease life is reduced by approximately half for every 10° C (50° F) rise in temperature. The higher the operating temperature, the more often the grease must be replenished. In most cases, experience in the specific application will dictate the frequency of lubrication.

A

LUBRICATION AND SEALS - *continued*

Timken application specific lubricants have been developed by leveraging our knowledge of tribology and anti-friction bearings and how these two elements affect overall system performance. Timken lubricants help bearings and related components operate effectively in demanding industrial operations. High-temperature, anti-wear and water-resistant additives offer superior protection in challenging environments. This chart is intended to provide an overview of the Timken greases available for general applications. Contact your local Timken representative for a more detailed publication on Timken lubrication solutions.

LUBRICATION SELECTION GUIDE

Environment		*Application*
High Wear • Moderate Loads Moderate Speeds Moderate Temperatures	Timken Premium All Purpose Industrial Grease	Agriculture • Bushings/Ball Joints Truck and Auto Wheel Bearings Heavy Duty Industrial
High Speeds • Light Loads Moderate Temperatures Moderate Water	Timken Ball Bearing Electric Motor Grease	Alternators • Generators Electric Motors • Fans/Pumps
Extreme Heat • Heavy Loads High Sliding Wear Dirty Environments Slow Speeds • Shock Loading	Timken Construction and Off- Highway Grease	Agriculture/Mining • Cement Plants Construction/Off Road • Rock Quarry Earth Moving Equipment Fleet Equipment • Heavy Industry Pivot Pins/Splined Shafts
Wet and Corrosive Conditions Quiet Environments • Light Loads Moderate to High Speeds Moderate Temperatures	Timken Ball Bearing Pillow Block Grease	Lightly Loaded Pillow Blocks Idler Pulleys • Oven Conveyors Chemical Manufacture Noise-Sensitive Applications
Corrosive Media • Extreme Heat Heavy Loads • Wet Conditions Slow to Moderate Speeds	Timken Mill Grease	Aluminum Mills • Paper Mills Steel Mills • Offshore Rigs Power Generation
Incidental Food Contact Hot and Cold Temperatures Moderate to High Speeds Medium Loads	Timken Food Safe Grease	Food and Beverage Industries Pharmaceuticals
Extreme Low and High Temperatures Severe Loads Corrosive Media Slow to Moderate Speeds	Timken Synthetic Industrial Grease	Wind Energy Main Bearing Pulp and Paper Machines General Heavy Industry Marine Applications Centralized Grease Systems
Ultra-High Speeds Extreme Low Temperatures	Timken Ultra-High Speed Spindle Grease	Machine Tools Associated with: Grinding • Drilling • Turning Milling • Lathes
Moderate Speeds Light to Moderate Loads Moderate Temperatures Moderate Water	Timken Multi-Use Lithium Grease	General Industrial Applications Pins and Bushings • Track Rollers Water Pumps Plain and Antifriction Bearings

Table 24.

This selection guide is not intended to replace specific suggestions by the equipment builder.

LUBRICATION AND SEALS - *continued*

SELECTING THE RIGHT SEAL

When selecting the proper seal design for any Timken bearing application, it is necessary to consider the type of lubricant, the operation environment, the speed of the application and general operating conditions.

Grease Lubrication - Venting

In any bearing application, good design practice allows for adequate venting in case of heat generation. This is especially valid when grease lubrication is used in conjunction with contact or non-contact seals. This will also help prevent an ingress of contamination past the seals in the event that a pressure differential is created between the bearing cavity and the ambient environment.

Shaft Finish

It is important to ensure that no spiral grooves result from machining shaft surfaces since these will tend to draw lubricant out of, or contaminant into, the bearing cavity. Plunge grinding normally produces a satisfactory surface finish.

Vertical Shaft Closures - Oil Lubrication

Lubricating vertical shaft bearings is a difficult problem. Normally, grease, oil mist or oil-air lubrication is used because of the simplicity. However, some high speed and/or heavy load applications will use circulating oil. This requires a very good sealing system and a suction pump to remove the oil from the bottom bearing position.

Precision triple-ring labyrinth seals are supplied with all Timken pillow blocks to exclude foreign matter and retain lubricants. The pillow block base includes extra large oil return holes at the bottom of the seal grooves to prevent leakage past the seals. For additional information on seal options not shown, contact your Timken representative.

TACONITE SEALS

FTV Series
Flinger Taconite Seal with V-ring

- Combines the qualities of the face labyrinth seal and the DUSTAC seal to improve the sealing efficiency for extremely contaminated environments.
- The rotating flinger added to the basic design, incorporates face labyrinth grooves and compresses the O-ring in the bore. This protects against incursion of foreign matters and ensures regular pressure of the V-ring to the cartridge face.

FTL Series
Flinger Taconite Seal with Lip Seal

- The FTL seal has the same property as the FTV Series, but above the V-ring is substituted to a lip seal working directly on the Flinger Lip to prevent the shaft of any grooving.
- The FTV and FTL Taconite seals can be substituted in either ER or LER ring SAF pillow block series and do not require modifications to the standard housings.

NOTE: *Flinger Taconite seals can be substituted to "ER" or "LER" seal. Add the suffix "L" to the number when it is for a housing using LER Seals (e.g., TFV-515L for SAF-515L pillow block).*

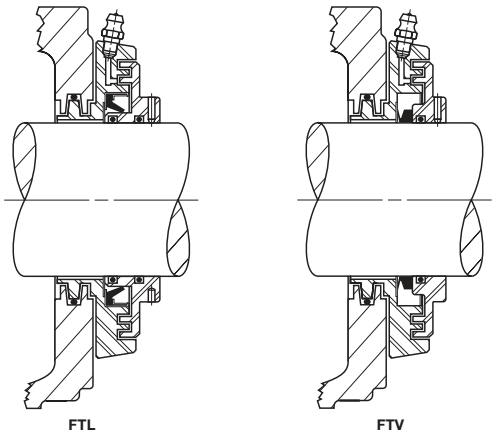

Fig. 24. Taconite seal designs.

LABRINYTH SEALS

- Using labrinyth seals greatly increases the operating time between maintenance intervals of rotating equipment.
- Used in split pillow blocks.
- Endures extreme environments such as pulp and paper, chemical and mining because of its exceptional design.
- Two-piece labyrinth seal of Teflon® PTFE fluoropolymer resin. The assembly inhibits the passage of contaminants or lubricants and prevents the components from coming apart during installation and service.
- Installation is simple compared to many other lip-contact type seals and is more effective in reducing lubricant loss, improving plant safety. It is also environmentally friendly.

Other Benefits Include:

- Drop-in style eliminates machining or modification to housing.
- Interchangeable with LER or taconite seals.
- Available for standard Inch and SNH pillow blocks ($1\,^3/_4$ in. to 8 in. shaft diameter).
- Minimizes lubricant leakage.
- Accommodates greater shaft misalignment or eccentricity.
- Reduced number of components over conventional seals.

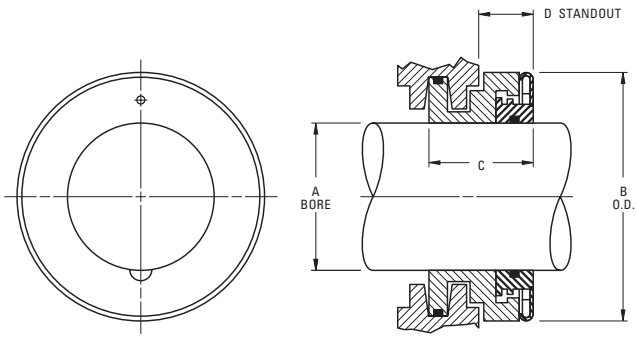

Fig. 25. Labrinyth seal designs.

A

SPEED, HEAT AND TORQUE

SPEED RATINGS

There is no precise method for determining the maximum speed at which a bearing may operate. Bearing characteristics and features of surrounding parts, shafts, housing and other components as well as basic service conditions, are all variables dependent upon each other for continued satisfactory high-speed performance.

The safe operating speed of a bearing is often limited by the temperature within the bearing, which in turn is often dependent upon the temperature surrounding the application, accuracy of the bearings, shafts, housings, auxiliary parts and the type and amount of lubricant. Bearings with proper internal refinements will operate at high speeds for long periods if properly installed and lubricated. Tolerance grade, cage design, and lubricant are bearings characteristics that affect speed limitations.

Although the speed rating values tabulated within are based on many years of research and accumulated data, numerous applications of Timken bearings are successfully operating with speed values in excess of those tabulated. Such applications require particular consideration of proper tolerance grade, lubrication, the effect of centrifugal force on rolling elements and other factors. For further information consult your Timken representative.

Conversely, under certain application conditions of load, temperature, contamination, etc., speed capabilities may be less than published within.

For spherical roller bearings, the thermal speed ratings are listed in the bearing tables. These values have been determined by balancing the heat generated within the bearing with the heat dissipated from the bearing. In calculating these numbers, the following assumptions have been made:

- The radial load is 5 percent of the static load rating.
- For oil, it is assumed to be in a bath with the fill to the middle of the lowest rolling element. For grease it is assumed a 30 percent bearing cavity fill.
- The oil viscosity is assumed to be 12 cSt (ISO VG 32) operated at 70˚ C (158˚ F) and the grease base oil viscosity is assumed to be 22 cSt operated at 70˚ C (158˚ F). The bearing and its components are at 70˚ C (158˚ F) and the bearing environment is at 20˚ C (68˚ F).
- The housing and shaft are steel or cast iron.
- The bearing rotational axis is horizontal.
- The outer ring is stationary and the inner ring is rotating.
- The bearing radial internal clearance complies with class normal and standard fits are used.
- The bearing does not contain seals.
- The bearing does not experience misalignment or axial load.

The speed ratings are for reference only and can be considerably lower or higher depending on your application. Consult your Timken representative for more accurate information regarding a bearing's speed capabilities in your application.

SPEED, HEAT AND TORQUE - *continued*

OPERATING TEMPERATURES

Temperature Limitations

Bearing equilibrium temperature is not simply a question of speed. It is also dependent on the heat generation rate of all contributing heat sources, nature of the heat flow between sources, and heat dissipation rate of the system. Seals, gears, clutches, and oil supply temperature affect bearing operating temperature.

Heat dissipation rate is governed by such factors as type of lubrication system; materials and masses of the shaft and housing and intimacy of contact with the bearing; and surface area and character of the fluid both inside and outside the housing.

Temperature of the outer surface of the housing is not an accurate indication of bearing temperature. The inner ring temperature is often greater than the outer ring temperature and both are usually greater than the outer surface of the housing. There are temperature gradients within the bearing, with the temperature of the internal parts usually being greater than the outer surfaces. Although the temperature of the outer ring O.D., the inner ring I.D., or the oil outlet often used as an indicator of bearing temperature, it should be recognized that these are generally not the highest bearing temperatures.

During transient conditions, such as at startup, bearing temperatures will often peak and then reduce to a lower level. This is due to the thermal changes taking place between the bearing, shaft and housing, causing variations in internal clearance and internal loading. Also, a new bearing will usually generate more heat until it runs in.

The allowable operating temperature depends on:

- Equipment requirements
- Lubrication limitations
- Bearing material limitations
- Reliability requirements

Each factor is an area of increasing concern as operating temperatures rise.

The equipment designer must decide how operating temperature will affect the performance of the equipment being designed. Precision machine tools, for example, can be very sensitive to thermal expansions. In many cases it is important that the temperature rise over ambient be minimized and held to 20 to 25° C (36 to 45° F) for some precision spindles.

Most industrial equipment can operate satisfactorily with considerably higher temperature rises. thermal ratings on gear drives, for example, are based on 93° C (200° F).

Some equipment such as plastic calendars and gas turbine engines operate continuously at temperatures well above 100° C (212° F).

Standard bearing steels cannot maintain the desired minimum hot hardness of 58 Rc much above 135° C (275° F).

Standard Timken spherical roller bearings are dimensionally stabilized up to 200° C (392° F). Upon request, the bearings can be ordered with dimensional stabilization up to 250° C (482° F) or 300°C (572° F).

Consult your Timken representative for availability of S1, S2, S3 suffixes or high-temperature steels in specific part numbers and applications.

Although bearings can operate satisfactorily at higher temperatures, an upper temperature limit of 80 to 95°C (176 to 203°F) is usually more practical for small, high volume equipment where prototype testing is possible. Higher operating temperatures increase the risk of damage from some unforeseen, transient condition. If prototype testing is not practical, an upper design limit of 80°C (176°F) is appropriate, unless prior experience on similar equipment suggests otherwise.

History on some machines operating at higher temperatures, such as high-speed rolling mills, offers good background data for establishing limits on new, similar machines.

Obviously none of the above examples of equipment, lubricant or bearing material limitations are single point limitations, but rather areas of gradually increasing concern. It is the responsibility of the equipment designer to weigh all relevant factors and make the final determination of what operating temperature is satisfactory for a particular machine.

Suggested materials for use in rings and rollers at various operating temperatures are listed together with data on chemical composition, hardness and dimensional stability. A temperature of 427° C (800° F) is generally the top limit for successful bearing operation using steels. Above 427° C (800° F), or below where lubricant is not permitted, cast or wrought cobalt alloys are generally used. Although chosen primarily for their good retention of physical properties, they also possess good oxidation resistance at elevated temperatures.

Table 26 provides standard operating temperatures for common bearing component materials. They should be used for reference purposes only as specific alloys used may vary. Other bearing component materials are available on request. Contact your Timken representative for further information.

A

SPEED, HEAT AND TORQUE - *continued*

These tables provide standard operating temperatures for common bearing component materials. It should be used for reference purposes only as specific alloys used may vary. Other bearing component materials are available on request. Contact your Timken representative for further information.

OPERATING TEMPERATURES FOR BEARING COMPONENT MATERIALS

RINGS AND ROLLERS SINGLE-ROW

Material	Approximate Chemical Analysis-%	Temp. °F	Hardness Rc	Operating Temperature -73° C -100° F / -54° C -65° F / -17° C 0° F / 38° C 100° F / 93° C 200° F / 121° C 250° F / 149° C 300° F / 204° C 400° F / 260° C 500° F / 316° C 600° F / 371° C 700° F / 427° C 800° F
Low alloy carbon-chromium bearing steels. 52100 and others per ASTM A295	1C 0.5-1.5Cr 0.35Mn	70	60	STANDARD DIMENSIONAL STABILIZATION <0.0001 in/in dimensional change in 2500 hours at 100° C (212° F). Good oxidation resistance.
Low alloy carbon-chromium bearing steels. 52100 and others per ASTM A295	1C 0.5-1.5Cr 0.35Mn	70 350 450	58 56 54	Heat stabilized per FS136 <.0001in./in dimensional change in 2500 hours at 300° F When given a stabilizing heat treatment, A295 steel is suitable for many applications in the 177-232° C (350-450° F) range; however, it is not as stable dimensionally as it is at temperatures below 177°C (350° F). If utmost stability is required, use materials in the 316° C (600° F) group below.
Deep hardening steels for heavy sections per ASTM A485	1C 1-1.8Cr 1-1.5 Mn .06Si	70 450 600	58 55 52	As heat treated and tempered, it is stabilized, <.0001 in/in dimensional change in 2500 HR at 149° C (300° F).
Carburizing steels per ASTM A534 (a) low alloy 4118 (b) 8620 (c) high nickel 3310	 .2C, .5Cr, .80Mn, .12Mo .2C, .5Cr, .80 Mn, .20 Mo, .55Ni .10C, 1.60Cr, .50Mn, 3.50Ni	70	58	4118,8620 steel frequently used to achieve extra ductility in inner rings for locking devise bearings. 3310 and others used for extra thick section rings.
Corrosion Resistant 440C stainless steel per ASTM A756	1C 18Cr	70	58	Excellent corrosion resistance.
Corrosion Resistant 440C stainless steel per ASTM A756	1C 18Cr	70 450 600	58 55 52	As heat stabilized for maximum hardness at high temperatures (FS238). Good oxidation resistance at higher temperatures. Note load capacity drops off more rapidly at higher temperatures than M50 shown below, which should be considered if loads are high. <.0001 in/in dimensional change in 1200 hours.
M-50 Medium High Speed	4 Cr. 4 Mo 1V 0.8C	70 450 600	60 59 57	Recommended where stable high hardness at elevated temperature is required. <.0001 in/in dimensional change in 1200 hours at 316° C (600° F).

Table 25.

Dimensional stability data shown above is the permanent metallurgical growth and/or shrinkage only. Thermal expansion effects are not included. Bearings have been made of special material for operation at temperatures above 427° C (800° F). Consult your Timken representative regarding the application.

Note: ASTM A295 bearing steels are suitable for many applications up to 121°C (250° F) but are not as dimensionally stable as they are at temperatures below 100° C (212° F).

OPERATING TEMPERATURES FOR BEARING COMPONENT MATERIALS

CAGES, SHIELDS AND SEALS

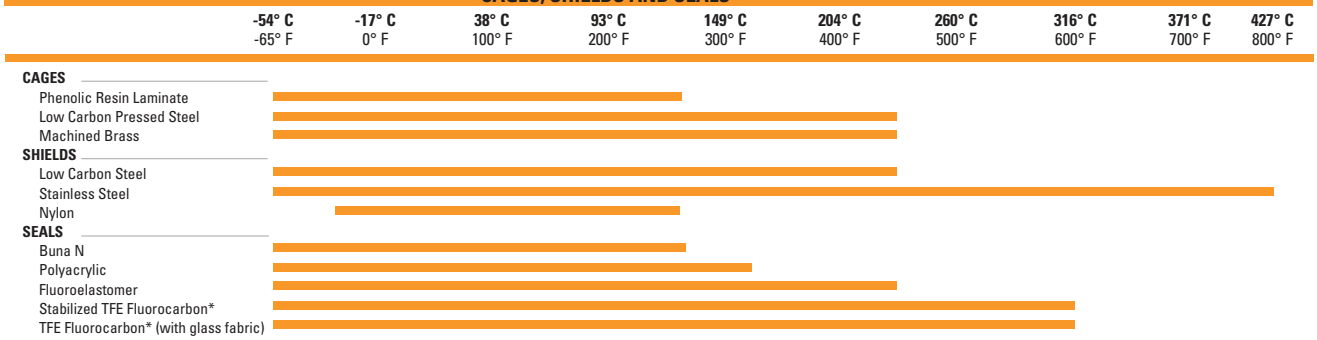

* Limited life above these temperatures.

Table 26. Operating temperature ranges for bearing component materials.

SPEED, HEAT AND TORQUE - *continued*

HEAT GENERATION AND DISSIPATION

One of the major benefits of oil-lubricated systems is that the heat generated by the bearings is carried away by the circulating oil and dissipated through the system.

Heat Generation

Under normal operating conditions, most of the torque and heat generated by the bearing is due to the elastohydrodynamic losses at the roller/race contacts.

The following equation is used to calculate the heat generated by the bearing:

$$Q_{gen} = k_4 n M$$

Where:

Q_{gen} = generated heat (W or BTU/min)
M = running torque N-m or lbf-in
n = rotational speed (RPM)
k_4 = Dimensional factor to calculate heat generation rate
= 0.105 for Qgen in W when M in N-m
= 6.73×10^{-4} for Qgen in BTU/min when M in lbf-in

Heat Dissipation

The heat dissipation rate of a bearing system is affected by many factors. The modes of heat transfer need to be considered. Major heat transfer modes in most systems are conduction through the housing walls, convection at the inside and outside surfaces of the housing, and convection by the circulating lubricant. In many applications, overall heat dissipation can be divided into two categories: heat removed by circulating oil and heat removed through the housing.

Heat Dissipation by Circulating Oil

Heat dissipated by a circulating oil system is:

$$Q_{oil} = k_5 f \quad (\theta_o - \theta_i)$$

If a circulating lubricant other than petroleum oil is used, the heat carried away by that lubricant will be:

$$Q_{oil} = k_6 C_p \rho f (\theta_o - \theta_i)$$

The following factors apply to the heat generation equations listed on this page.

k_5	Dimensional factor to calculate heat carried away by a petroleum oil k_5 = 28 for Q_{oil} in W when f in l/min and θ in °C = 0.42 for Q_{oil} in BTU/min when f in U.S. pt/min and θ in °F	
k_6	Dimensional factor to calculate heat carried away by a circulating fluid k_6 = 1.67×10^{-5} for Q_{oil} in W = 1.67×10^{-2} for Q_{oil} in BTU/min	
Q_{oil}	Oil heat dissipation rate of circulating oil	W, BTU/min
θ_i	Oil inlet temperature	°C, °F
θ_o	Oil outlet temperature	°C, °F
C_p	Specific heat of lubricant	J/(kg x °C), BTU/(lb x °F)
f	Lubricant flow rate	L/min, U.S. pt/min
ρ	Lubricant density	kg/m3, lb/ft3

Other Considerations

Until now, temperature limitation has been discussed in reference to metallurgical considerations. However, installations which operate at high temperatures for extended periods may lose the quality of shaft and housing fits. Carefully machined and heat-treated shafts and housings will minimize trouble from this source. In some applications the internal clearance of bearings may be partially absorbed. For example, during the first few seconds of rotation, a massive housing may keep the outer race cooler than the inner race and rolling elements even if the housing is already at some elevated temperature. Also, during heat soakback when rotation stops, heat may flow back to the bearing along the shaft. If, while stationary, the effects of heat soakback more than remove the radial internal clearance, radial brinell of the races may occur, and the bearing will be rough during subsequent rotation. Bearings with extra internal looseness may be required to compensate for the above conditions.

BEARING TORQUE

The torque equations for spherical roller bearings are given as follows, where the coefficients are based on series and found in Table 27.

$$M = \begin{cases} f_1 \cdot F_\beta \cdot d_m + 10^{-7} \cdot f_0 (v \cdot n)^{2/3} \cdot d_m^3 & \text{if } (v \cdot n) \geq 2000 \\ f_1 \cdot F_\beta \cdot d_m + 160 \times 10^{-7} \cdot f_0 \cdot d_m^3 & \text{if } (v \cdot n) < 2000 \end{cases}$$

Again, note that the viscosity is in units of centistokes (cSt). The load term (F_β) is as follows:

Radial or Thrust Spherical Roller: $F_\beta = \max \begin{pmatrix} 0.8 \cdot F_a \cot \alpha \\ \text{or} \\ F_r \end{pmatrix}$

COEFFICIENTS FOR THE TORQUE EQUATION		
Dimension Series	f_0	f_1
39	4.5	0.00017
30	4.5	0.00017
40	6.5	0.00027
31	5.5	0.00027
41	7	0.00049
22	4	0.00019
32	6	0.00036
03	3.5	0.00019
23	4.5	0.00030

Table 27. Coefficients for the torque equation.

A

NOTES

SPHERICAL ROLLER BEARINGS

B

B

B SPHERICAL ROLLER BEARINGS

SPHERICAL PILLOW BLOCKS

B

SPHERICAL ROLLER BEARINGS

B

SPHERICAL ROLLER BEARINGS

Overview: Timken spherical roller bearings feature all of the characteristics that have made Timken renowned – superior design, reliable performance and comprehensive technical support. Spherical roller bearings are designed to manage high radial loads and perform consistently, even when misalignment, marginal lubrication, contamination, extreme speeds and critical application stresses are present.

- **Sizes:** Bore sizes of 25 mm and larger.
- **Markets:** Pulp and paper, power generation, oil field, mining and aggregate processing, wind turbines, gear drives and rolling mills.
- **Features:** Large bores for integration into heavy-duty industrial applications.
- **Benefits:** High load capacity under misalignment conditions from shaft deflections or housing misalignment.

Spherical Roller Bearings

Series:

239	230	240	231	241	222	232	213	223	233

Bore:
(5 x _ _ = bore in millimeters when 2 digits)
5 x 07 = 35 mm
5 x 76 = 380 mm
(/ # # # = bore in millimeters when >2 digits)
/530 = 530 mm
/1060 = 1060 mm

222 **17** **K CJ W33** **C3**

223 **26** **YM W33 W800** **C4**

Modification and style codes:
K = tapered bore
CJ = 2 piece steel cage - window type
VCSJ = 2 piece steel cage - finger type
YM = 1 piece brass cage - finger type
YMB = 1 piece brass, finger type, land piloted
YMD = 2 piece brass, finger type, land piloted
W33 = 3 holes and groove in O.D.
W800 = shaker screen modification:
- tighter bore diameter and O.D. tolerances
- brass cage
- RIC in upper $^{2}/_{3}$ of clearance specified

W47 = inner ring with oversize bore

Internal Clearance:
C2 less than C0
C0 normal
C3 greater than C0
C4 greater than C3
C5 greater than C4
C6 special clearance

Current Industry Standard:

22326

2 **23** **26**

double-row series SRB

Bore
5 x 26 = Bore in millimeters
130 mm

Old ABMA Part Number:

130SD23

130 **SD** **23**

Bore
130 = Bore in millimeters
130 mm

B

Spherical Roller Bearings

B

INTRODUCTION

The Timken self-aligning spherical roller bearing is a combination radial and thrust bearing, designed to operate even if shaft and housing are, or become, misaligned under load. This high-capacity bearing is the favored choice when conditions include heavy loads, plus difficulties in establishing or maintaining housing alignment, or when shaft deflection can be expected.

Shaft deflections and housing distortions, caused by shock or heavy loads that lead to misalignment, are compensated with internal self-alignment of the bearing elements during operation. Edge loading of rollers, a condition that limits service life on other types of bearings, does not develop in spherical roller bearings. Optimum bearing capacity can often be realized with up to ±1 ½ degrees of misalignment, depending on the size and series of bearing selected.

The spherical roller bearing's inherent compensation for misalignment offers the designer the opportunity to use weldments for housing frames instead of complex castings, eliminating high-cost machining operations. Even when castings may be preferred, bore alignment is less critical if spherical roller bearings are specified. Unit design and construction also make the spherical roller bearing convenient to handle during installation or maintenance.

Several types of radial spherical roller bearings include CJ, YM, YMB, YMD, and VCSJ types.

Bearings are made to ISO Class 0 tolerances. Life calculations, shaft and housing fits, internal clearances, tolerances and other technical data for these bearings are found in the engineering section of this catalog.

BEARING TYPES

CJ

YM

Tapered Bore with Adapter Sleeve

YM

- Higher load ratings for longer life.
- Incorporates advanced features and precision-machined, roller-riding, one-piece brass cage.
- Suited for severe conditions of use.

YMB

- Higher load ratings for longer life.
- Incorporates advanced features and precision-machined, land-riding, one-piece brass cage.
- Suited for use in severe conditions.

YMD

- Incorporates advanced features and offers higher load ratings for longer life.
- Precision-machined, land-riding and two-pieced brass cages.
- Suited for use in severe conditions.

CJ

- High load ratings for longer life.
- Incorporates stamped steel window type cage for a broad range of applications.
- Utilize advanced features.

VCSJ

- Compact design for general use.
- Stamped steel finger type cage.

TAPERED BORE BEARINGS WITH ADAPTER SLEEVES

- SNW adapter assemblies consist of a sleeve and Locknut. Lockwashers are available for shaft mounting of tapered bore "K" bearings.
- Description of shaft mounting techniques for tapered bore bearings with adapter sleeves are found on page 104.

SHAKER SCREEN EQUIPMENT

- Vibrating equipment commonly found in the aggregate industry is one of the most demanding applications for spherical roller bearings.
- Timken manufactures spherical roller bearings suited for high rotational speeds, high radial and impact loads, fluctuating and unbalanced loads, misalignment and extreme centrifugal forces in tough environmental conditions.
- The design allows for static and dynamic misalignment in the application while maintaining the bearing's full dynamic capacity. This achieves maximum expected service life.
- Standards and special modification codes are available for shaft (s4 or m6) and housing (P6 or H7) fits as in the engineering section.

TIMKEN SPHERICAL ROLLER BEARING MODIFICATIONS

TKN	SKF	FAG	TIMKEN GENERAL DEFINITION
Other modifications available; contact your local Timken representative for more information.			
CJ	E, CC	J	Spherical with stamped steel cage
YM	M2/CA	M	One-piece roller riding machined brass cage
YMB	MC	MB	One-piece inner ring piloted machined brass cage
CO2	CO2	T52BE	Inner ring with P5 running accuracy, W4 (SKF does not include W4)
CO2 C3	CO23	C3, T52BE	Inner ring with P5 running accuracy, C3 RIC
CO2 C4	CO24	C4, T52BE	Inner ring with P5 running accuracy, C4 RIC
CO4	CO4	T52BN	Outer ring with P5 running accuracy, W4 (SKF does not include W4)
CO4 C3	CO43	C3, T52BN	Outer ring with P5 running accuracy, C3 RIC
CO4 C4	CO44	C4, T52BN	Outer ring with P5 running accuracy, C4 RIC
CO8	C08	T52BW C02	P5 running accuracy (CO2 and CO4)
CO8 C3	CO83	C3, T52BW	P5 running accuracy (CO2 and CO4), C3 RIC
CO8 C4	CO84	C4, T52BW	P5 running accuracy (CO2 and CO4), C4 RIC
C6	C6	—	Special RIC non-specific
K	K	K	Tapered bore (1: 12 on diameter 22, 23, 30, 31, 32, 33, 39 series)
K	K30	K30	Tapered bore (1: 30 on diameter 40, 41, 42 series)
W4	W4	J26A	Mark high and low points of eccentricity on face of rings
W6R	—	—	Engineered coating on rollers to combat low lube or abrasive contamination
W8	—	—	Rings and rollers TDC® coated
W20	W20	SY	Outer ring with standard lubrication holes
W22	W22	700855	Special reduced O.D. tolerance on outer rings
W25	W73	—	Outer ring with counter drilled lubrication hole
W31	W31	—	Bearing inspected to certain quality control requirements
W33	W33	S	Standard lubrication holes and groove in outer ring (FAG drops S from number for sizes larger than 315 mm O.D.)
W33 W4	W503	S + J26A	Timken and FAG drop W33 W4 in conjunction with CO8, W507
W33 W22 W31	W512 (W22 + W31 + W33)	S + 700855	Timken and FAG drop W31 in conjunction with CO2, CO4, and CO8
W33 W94	W513 (W26 + W33)	S + H40A	See other component description
W37			Special finish
W40I	ECB (Prefix)	W209B	Inner ring only made of carburizing grade steel
W40R	—	—	Rollers only made of carburizing grade steel
W45A	W61	—	Tapped lifting holes in face of outer ring to facilitate lifting and handling
W84	W77	H44S (H40)*	Outer ring with standard lubrication holes plugged
W88	—	—	Special reduced bore tolerance on inner ring
W93	—	—	Inner ring with keyway in bore
W94	W26	H40A	Inner ring lubrication holes and retainer face grooves SKF and FAG - no retainer face grooves
W502	W502 (W22 + W33)	S + 700855	W22, W33 and W45A (where feasible)
W507	W507 (W4 + W31 + W33)	S +	W31, W33 and W45A (where feasible)
W509	W509 (W26 + W31 + W33)	S.H40A + …	W31, W33, W94 and W45A (where feasible)
W525	W525 (W31 + W77)	S.H44S (H40)*	W31, W33, W84 and W45A (where feasible)
W534	W534 (CO8 + W507)	—	W507 and CO8
W800	VA405	T41A	W22 + W88 + radial internal clearance in upper two-thirds of range specified range (shaker screen modification)
W906A	—	—	CO2 + CO4 + W31 + W33 + W40I + W40R (offered on tapered bore product, supercedes W507A, W534A)

Table 28.

Data in this chart has been compiled to make the information as complete as possible; Timken cannot assume any responsibility for errors, omissions or accuracy of the published data.

B

SPHERICAL ROLLER BEARINGS

- Life calculations, shaft and housing fits, internal clearances, tolerances and other technical data for these bearings are found in the engineering section of this catalog.
- Bearings are available with a tapered bore for adapter type mounting. To order, add the suffix "K" to bearing number (e.g., 23120K).
- Consult your Timken representative for up-to-date information about the availability of the bearings you have selected.

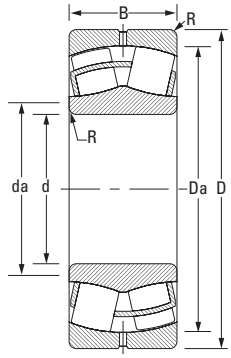

CJ

Bearing Number	d Bore	D O.D.	B Width	R Fillet[2] (max.)	Backing Diameter d_a Shaft	Backing Diameter D_a Housing	Load Ratings Static Load Rating C_0	Load Ratings Dynamic Load Rating C	Equivalent Radial Load Factors[1] Dynamic e	Dynamic $\frac{F_a}{F_r} \le e$ X = 1 Y	Dynamic $\frac{F_a}{F_r} > e$ X = .67 Y	Static In All Cases $X_0 = 1$ Y_0	Lubrication Life Adjustment Factor[4] C_g	Speed Ratings[3] Grease	Speed Ratings[3] Oil	Weight
	mm in.	mm in.	mm in.	mm in.	mm in.	mm in.	kN lbs.	kN lbs.						RPM	RPM	kg lbs.
22205CJ	25 0.9843	52 2.0472	18.0 0.7087	1.0 0.04	30 1.2	47 1.9	43.0 9700	44.0 9800	0.34	2.00	2.98	1.96	0.0384	7700	9600	0.2 0.4
21305VCSJ	25 0.9843	62 2.4409	17.0 0.6693	1.0 0.04	33 1.3	54 2.1	38.0 8400	41.0 9200	0.29	2.33	3.47	2.28	0.0403	7000	8700	0.3 0.6
22206CJ	30 1.1811	62 2.4409	20.0 0.7874	1.0 0.04	38 1.5	56 2.2	61.0 13700	58.0 13100	0.31	2.15	3.20	2.10	0.0435	6600	8100	0.3 0.6
21306VCSJ	30 1.1811	72 2.8346	19.0 0.7480	1.0 0.04	39 1.5	63 2.5	51.0 11300	53.0 12000	0.28	2.45	3.64	2.39	0.0444	6200	7600	0.4 0.8
22207CJ	35 1.3780	72 2.8346	23.0 0.9055	1.0 0.04	45 1.8	65 2.6	88.0 19700	78.0 17500	0.31	2.21	3.29	2.16	0.0484	5900	7200	0.5 1.0
21307VCSJ	35 1.3779	80 3.1496	21.0 0.8268	1.5 0.06	44 1.7	71 2.8	66.0 14800	67.0 15000	0.27	2.48	3.69	2.42	0.0484	5600	6900	0.5 1.1
22208CJ	40 1.5748	80 3.1496	23.0 0.9055	1.0 0.04	50 2.0	72 2.9	100 22400	90.0 20100	0.27	2.47	3.67	2.41	0.0494	5100	6300	0.6 1.2
22208YM	40 1.5748	80 3.1496	23.0 0.9055	1.0 0.04	50 2.0	72 2.9	93.5 21000	85.5 19200	0.27	2.47	3.67	2.41	0.0514	5200	6400	0.6 1.2
21308VCSJ	40 1.5748	90 3.5433	23.0 0.9055	1.5 0.06	51 2.0	81 3.2	85.0 19100	81.0 18200	0.26	2.55	3.80	2.50	0.0529	5100	6200	0.7 1.5
22308CJ	40 1.5748	90 3.5433	33.0 1.2992	1.5 0.06	53 2.1	81 3.2	148 33100	133 29800	0.36	1.87	2.79	1.83	0.0541	4900	5800	1.1 2.3
22308YM	40 1.5748	90 3.5433	33.0 1.2992	1.5 0.06	53 2.1	81 3.2	148 33100	133 29800	0.36	1.87	2.79	1.83	0.0541	4900	5800	1.1 2.3
22209CJ	45 1.7717	85 3.3465	23.0 0.9055	1.0 0.04	55 2.2	77 3.0	108 24200	94.0 21100	0.26	2.64	3.93	2.58	0.0547	4700	5700	0.6 1.3
22209YM	45 1.7717	85 3.3465	23.0 0.9055	1.0 0.04	55 2.2	77 3.0	101 22800	90.0 20100	0.26	2.64	3.93	2.58	0.0547	4700	5800	0.6 1.3
21309VCSJ	45 1.7717	100 3.9370	25.0 0.9843	1.5 0.06	57 2.2	91 3.6	106 23900	100 22500	0.26	2.64	3.93	2.58	0.0567	4600	5700	0.9 2
22309CJ	45 1.7717	100 3.9370	36.0 1.4173	1.5 0.06	58 2.3	90 3.5	182 40800	162 36400	0.36	1.90	2.83	1.86	0.0565	4500	5300	1.4 3.1
22309YM	45 1.7717	100 3.9370	36.0 1.4173	1.5 0.06	58 2.3	90 3.5	182 40800	162 36400	0.36	1.90	2.83	1.86	0.0579	4500	5300	1.4 3.1
22210CJ	50 1.9685	90 3.5433	23.0 0.9055	1.0 0.04	59 2.3	82 3.2	118 26000	101 22600	0.24	2.84	4.23	2.78	0.0575	4300	5200	0.6 1.4
22210YM	50 1.9685	90 3.5433	23.0 0.9055	1.0 0.04	59 2.3	82 3.2	112 25100	96.5 21700	0.24	2.84	4.23	2.78	0.0575	4300	5300	0.6 1.4
22310CJ	50 1.9685	110 4.3307	40.0 1.5748	2.0 0.08	64 2.5	98 3.9	226 51000	197 44200	0.36	1.87	2.79	1.83	0.0422	4200	4900	1.9 4.2
22310YM	50 1.9685	110 4.3307	40.0 1.5748	2.0 0.08	64 2.5	98 3.9	226 51000	197 44200	0.36	1.87	2.79	1.83	0.0422	4200	4900	1.9 4.2
22211CJ	55 2.1654	100 3.9370	25.0 0.9843	1.5 0.06	66 2.6	91 3.6	142 32000	120 27000	0.23	2.95	4.40	2.89	0.0604	4000	4800	0.9 1.9

(1) These factors apply for both inch and metric calculations. See engineering section for instructions on use.
(2) Maximum shaft or housing fillet radius that bearing corners will clear.
* Available in standard shaker screen bearing design configuration (example: 223xxYMW33W800C4).
(3) See thermal speed ratings in the engineering section.
(4) Geometry constant for Lubrication Life Adjustment Factor a_{3l}. See "Bearing Load Ratings and Life Calculations."

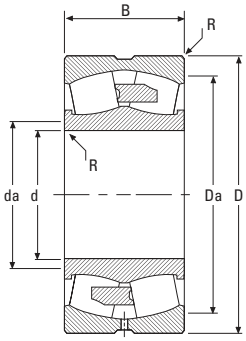

YM

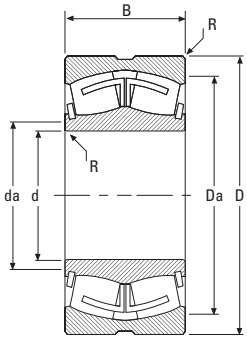

VCSJ

Bearing Number	d Bore	D O.D.	B Width	R Fillet[2] (max.)	Backing Diameter d_a Shaft	Backing Diameter D_a Housing	Load Ratings Static Load Rating C_0	Load Ratings Dynamic Load Rating C	Equivalent Radial load Factors[1] Dynamic e	Dynamic $\frac{F_a}{F_r} \le e$ X = 1 Y	Dynamic $\frac{F_a}{F_r} > e$ X = .67 Y	Static In All Cases $X_0 = 1$ Y_0	Lubrication Life Adjustment Factor[4] C_g	Speed Ratings[3] Grease	Speed Ratings[3] Oil	Weight
	mm in.	mm in.	mm in.	mm in.	mm in.	mm in.	kN lbs.	kN lbs.						RPM	RPM	kg lbs.
22311CJ	55 2.1654	120 4.7244	43.0 1.6929	2.0 0.08	69 2.7	107 4.2	248 55800	221 49600	0.36	1.87	2.79	1.83	0.0446	3900	4700	2.4 5.3
22311YM	55 2.1654	120 4.7244	43.0 1.6929	2.0 0.08	69 2.7	107 4.2	248 55800	221 49600	0.36	1.87	2.79	1.83	0.0446	3900	4700	2.4 5.3
21311VCSJ	55 2.1654	120 4.7244	29.0 1.1417	2.0 0.08	70 2.8	109 4.3	158 35500	141 31700	0.24	2.82	4.20	2.76	0.0446	4000	4800	1.5 3.3
22212CJ	60 2.3622	110 4.3307	28.0 1.1024	1.5 0.06	72 2.8	100 4.0	174 39100	146 32800	0.24	2.84	4.23	2.78	0.0652	3800	4600	1.2 2.6
22212YM	60 2.3622	110 4.3307	28.0 1.1024	1.5 0.06	72 2.8	100 4.0	164 36900	140 31400	0.24	2.84	4.23	2.78	0.0645	3800	4700	1.2 2.6
22312CJ	60 2.3622	130 5.1181	46.0 1.8110	2.0 0.08	75 3.0	117 4.6	312 70100	269 60400	0.35	1.95	2.90	1.91	0.0463	3600	4300	3.0 6.6
22312YM	60 2.3622	130 5.1181	46.0 1.8110	2.0 0.08	75 3.0	117 4.6	312 70100	269 60400	0.35	1.95	2.90	1.91	0.0471	3600	4300	3.0 6.6
21312VCSJ	60 2.3622	130 5.1181	31.0 1.2205	2.0 0.08	76 3.0	118 4.7	179 40200	158 35500	0.24	2.81	4.19	2.75	0.0467	3700	4600	1.9 4.2
22213CJ	65 2.5591	120 4.7244	31.0 1.2205	1.5 0.06	78 3.1	109 4.3	217 49000	177 39800	0.24	2.79	4.15	2.73	0.0473	3600	4400	1.6 3.4
22213YM	65 2.5591	120 4.7244	31.0 1.2205	1.5 0.06	78 3.1	109 4.3	204 46000	170 38200	0.24	2.79	4.15	2.73	0.0468	3600	4400	1.6 3.4
21313VCSJ	65 2.5591	140 5.5118	33.0 1.2992	2.0 0.08	82 3.2	128 5.0	215 48300	189 42500	0.23	2.91	4.33	2.84	0.0463	3500	4300	2.4 5.3
22313CJ	65 2.5591	140 5.5118	48.0 1.8898	2.0 0.08	82 3.2	126 5.0	333 74900	290 65200	0.33	2.06	3.06	2.01	0.0455	3400	4100	3.6 8.0
22313YM	65 2.5591	140 5.5118	48.0 1.8898	2.0 0.08	82 3.2	126 5.0	333 74900	290 65200	0.33	2.06	3.06	2.01	0.0464	3400	4100	3.6 8.0
22214CJ	70 2.7559	125 4.9213	31.0 1.2205	1.5 0.06	84 3.3	115 4.5	231 52000	184 41400	0.22	3.01	4.48	2.94	0.0464	3400	4100	1.6 3.6
22314CJ	70 2.7559	150 5.9055	51.0 2.0079	2.0 0.08	87 3.4	131 5.2	385 86500	331 74300	0.34	2.00	2.98	1.96	0.0482	3200	3800	4.4 9.7
21314VCSJ	70 2.7559	150 5.9055	35.0 1.3780	2.0 0.08	88 3.5	138 5.4	240 54000	208 46700	0.23	2.90	4.31	2.83	0.0480	3300	4100	2.9 6.4
22314YM	70 2.7559	150 5.9055	51.0 2.0079	2.0 0.08	87 3.4	131 5.2	385 86500	331 74300	0.34	2.00	2.98	1.96	0.0482	3200	3800	4.4 9.7
22215CJ	75 2.9528	130 5.1181	31.0 1.2205	1.5 0.06	88 3.5	120 4.7	241 54100	191 42900	0.22	3.14	4.67	3.07	0.0477	3200	3900	1.7 3.8
22315CJ	75 2.9528	160 6.2992	55.0 2.1654	2.0 0.08	93 3.7	140 5.5	456 102000	387 87100	0.34	2.00	2.98	1.96	0.0505	3100	3600	5.4 11.9
21315VCSJ	75 2.9528	160 6.2992	37.0 1.4567	2.0 0.08	94 3.7	148 5.8	274 61600	237 53200	0.23	2.94	4.37	2.87	0.0502	3200	3800	3.5 7.7
22315YM	75 2.9528	160 6.2992	55.0 2.1654	2.0 0.08	93 3.7	140 5.5	456 102000	387 87100	0.34	2.00	2.98	1.96	0.0505	3100	3600	5.4 11.9

Continued on next page.

SPHERICAL ROLLER BEARINGS - *continued*

- Life calculations, shaft and housing fits, internal clearances, tolerances and other technical data for these bearings are found in the engineering section of this catalog.
- Bearings are available with a tapered bore for adapter type mounting. To order, add the suffix "K" to bearing number (e.g., 23120K).
- Consult your Timken representative for up-to-date information about the availability of the bearings you have selected.

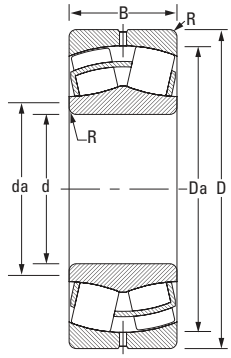

CJ

Bearing Number	d Bore	D O.D.	B Width	R Fillet[2] (max.)	Backing Diameter d_a Shaft	Backing Diameter D_a Housing	Load Ratings Static Load Rating C_0	Load Ratings Dynamic Load Rating C	Equivalent Radial Load Factors[1] Dynamic e	Dynamic $\frac{F_a}{F_r} \le e$ X = 1 Y	Dynamic $\frac{F_a}{F_r} > e$ X = .67 Y	Static In All Cases $X_0 = 1$ Y_0	Lubrication Life Adjustment Factor[4] C_g	Speed Ratings[3] Grease	Speed Ratings[3] Oil	Weight
	mm in.	mm in.	mm in.	mm in.	mm in.	mm in.	kN lbs.	kN lbs.						RPM	RPM	kg lbs.
22216CJ	80 3.1496	140 5.5118	33.0 1.2992	2.0 0.08	95 3.7	129 5.1	278 62500	218 49100	0.22	3.14	4.67	3.07	0.0499	3000	3700	2.2 4.7
22216YM	80 3.1496	140 5.5118	33.0 1.2992	2.0 0.08	95 3.7	129 5.1	263 59200	210 47100	0.22	3.14	4.67	3.07	0.0495	3000	3700	2.2 4.7
21316VCSJ	80 3.1496	170 6.6929	39.0 1.5354	2.0 0.08	100 3.9	158 6.2	305 68500	260 58400	0.23	2.95	4.40	2.89	0.0522	3000	3700	4.1 9
22316CJ	80 3.1496	170 6.6929	58.0 2.2835	2.0 0.08	97 3.8	148 5.8	510 115000	427 96100	0.34	2.00	2.98	1.96	0.0526	2900	3500	6.4 14.2
22316YM	80 3.1496	170 6.6929	58.0 2.2835	2.0 0.08	97 3.8	148 5.8	510 115000	427 96100	0.34	2.00	2.98	1.96	0.0526	2900	3500	6.4 14.2
22217CJ	85 3.3465	150 5.9055	36.0 1.4173	2.0 0.08	101 4.0	139 5.5	320 72000	255 57200	0.22	3.07	4.57	3.00	0.0518	2900	3500	2.7 6.0
22217YM	85 3.3465	150 5.9055	36.0 1.4173	2.0 0.08	101 4.0	139 5.5	302 67900	244 54800	0.22	3.07	4.57	3.00	0.0513	2900	3600	2.7 6.0
21317VCSM	85 3.3465	180 7.0866	41.0 1.6142	3.0 0.12	107 4.2	166 6.5	365 82000	301 67800	0.23	2.99	4.46	2.93	0.0547	2900	3500	5.2 11.5
22317CJ	85 3.3465	180 7.0866	60.0 2.3622	2.5 0.10	106 4.2	158 6.2	591 133000	474 107000	0.32	2.09	3.11	2.04	0.0554	2700	3200	7.5 16.4
22317YM	85 3.3465	180 7.0866	60.0 2.3622	2.5 0.10	106 4.2	158 6.2	591 133000	474 107000	0.32	2.09	3.11	2.04	0.0554	2700	3200	7.5 16.4
22218CJ	90 3.5433	160 6.2992	40.0 1.5748	2.0 0.08	105 4.2	146 5.8	388 87200	303 68100	0.23	2.90	4.31	2.83	0.0536	2800	3400	3.5 7.6
22218YM	90 3.5433	160 6.2992	40.0 1.5748	2.0 0.08	105 4.2	146 5.8	388 87200	303 68100	0.23	2.90	4.31	2.83	0.0536	2800	3400	3.5 7.6
23218CJ	90 3.5433	160 6.2992	52.0 2.0630	2.0 0.08	104 4.1	146 5.8	504 113000	369 83000	0.30	2.25	3.34	2.20	0.0536	2300	2700	4.5 10.0
23218YM	90 3.5433	160 6.2992	52.0 2.0630	2.0 0.08	104 4.1	146 5.8	504 113000	369 83000	0.30	2.25	3.34	2.20	0.0536	2300	2700	4.5 10.0
22318CJ	90 3.5433	190 7.4803	64.0 2.5197	2.5 0.10	110 4.3	167 6.6	642 144000	529 119000	0.35	1.92	2.86	1.88	0.0565	2600	3000	8.8 19.4
22318YM	90 3.5433	190 7.4803	64.0 2.5197	2.5 0.10	110 4.3	167 6.6	642 144000	529 119000	0.33	2.06	3.06	2.01	0.0565	2600	3000	8.8 19.4
21318VCSM	90 3.5433	190 7.4803	43.0 1.6929	3.0 0.12	113 4.5	176 6.9	398 89500	327 73400	0.23	3.00	4.47	2.93	0.0567	2800	3300	6.0 13.5
22319CJ	90 3.5433	190 7.4803	64.0 2.5197	2.5 0.10	110 4.3	167 6.6	642 144000	529 119000	0.33	2.06	3.06	2.01	0.0593	2600	3000	8.8 19.4
23318YM	90 3.5433	190 7.4803	73.0 2.8740	2.5 0.10	110 4.3	167 6.6	664 149000	516 116000	0.40	1.70	2.52	1.66	0.0555	1900	2200	10.1 22.2
22219CJ	95 3.7402	170 6.6929	43.0 1.6929	2.0 0.08	112 4.4	152 6.0	383 86200	289 65000	0.25	2.68	3.99	2.62	0.0556	2800	3400	4.2 9.3
22219YM	95 3.7402	170 6.6929	43.0 1.6929	2.0 0.08	112 4.4	152 6.0	383 86200	289 65000	0.25	2.68	3.99	2.62	0.0558	2800	3400	4.2 9.3

(1) These factors apply for both inch and metric calculations. See engineering section for instructions on use.
(2) Maximum shaft or housing fillet radius that bearing corners will clear.
* Available in standard shaker screen bearing design configuration (example: 223xxYMW33W800C4).
(3) See thermal speed ratings in the engineering section.
(4) Geometry constant for Lubrication Life Adjustment Factor a_{3l}. See "Bearing Load Ratings and Life Calculations."

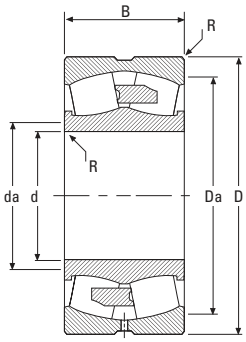

YM

Bearing Number	d Bore	D O.D.	B Width	R Fillet[2] (max.)	Backing Diameter d_a Shaft	Backing Diameter D_a Housing	Load Ratings Static Load Rating C_0	Load Ratings Dynamic Load Rating C	Equivalent Radial load Factors[1] Dynamic e	Dynamic $\frac{F_a}{F_r} \le e$ X = 1 Y	Dynamic $\frac{F_a}{F_r} > e$ X = .67 Y	Static In All Cases $X_0 = 1$ Y_0	Lubrication Life Adjustment Factor[4] C_g	Speed Ratings[3] Grease	Speed Ratings[3] Oil	Weight
	mm in.	mm in.	mm in.	mm in.	mm in.	mm in.	kN lbs.	kN lbs.						RPM	RPM	kg lbs.
22319YM	95 3.7402	200 7.8740	67.0 2.6378	2.5 0.10	119 4.7	175 6.9	735 165000	580 130000	0.32	2.09	3.11	2.04	0.0593	2400	2800	10.2 22.5
23120YM	100 3.9370	165 6.4961	52.0 2.0472	2.0 0.08	112 4.5	151 6.0	575 129000	379 85200	0.28	2.39	3.56	2.34	0.0567	2400	2800	4.4 9.7
22220CJ	100 3.9370	180 7.0866	46.0 1.8110	2.0 0.08	119 4.7	160 6.3	484 109000	373 83800	0.24	2.84	4.23	2.78	0.0577	2700	3200	5.1 11.2
22220YM	100 3.9370	180 7.0866	46.0 1.8110	2.0 0.08	119 4.7	160 6.3	484 109000	373 83800	0.24	2.84	4.23	2.78	0.0577	2700	3200	5.1 11.2
23220CJ	100 3.9370	180 7.0866	60.3 2.3740	2.0 0.08	118 4.7	165 6.5	646 145000	463 104000	0.31	2.18	3.24	2.13	0.0579	2100	2500	6.6 15.0
23220YM	100 3.9370	180 7.0866	60.3 2.3740	2.0 0.08	118 4.7	165 6.5	646 145000	463 104000	0.31	2.18	3.24	2.13	0.0579	2100	2500	6.6 15.0
22320CJ	100 3.9370	215 8.4646	73.0 2.8740	2.5 0.10	125 4.9	187 7.4	756 170000	586 132000	0.36	1.90	2.82	1.85	0.0618	2300	2700	13.0 28.7
22320YM	100 3.9370	215 8.4646	73.0 2.8740	2.5 0.10	125 4.9	187 7.4	756 170000	586 132000	0.36	1.90	2.82	1.85	0.0618	2300	2700	13.0 28.7
23122CJ	110 4.3307	180 7.0866	56.0 2.2047	2.0 0.08	127 5.0	169 6.7	615 138000	377 84800	0.28	2.37	3.53	2.32	0.0596	2200	2600	5.6 12.3
23122YM	110 4.3307	180 7.0866	56.0 2.2047	2.0 0.08	127 5.0	169 6.7	615 138000	377 84800	0.28	2.37	3.53	2.32	0.0596	2200	2600	5.6 12.3
24122CJ	110 4.3307	180 7.0866	69.0 2.7165	2.0 0.08	124 4.9	164 6.5	676 152000	448 101000	0.36	1.85	2.76	1.81	0.0588	1800	2100	6.9 15.2
22222CJ	110 4.3307	200 7.8740	53.0 2.0866	2.0 0.08	132 5.2	179 7.0	627 141000	475 107000	0.25	2.69	4.00	2.63	0.0616	2500	3000	7.3 16.1
22222YM	110 4.3307	200 7.8740	53.0 2.0866	2.0 0.08	132 5.2	179 7.0	627 141000	475 107000	0.25	2.69	4.00	2.63	0.0616	2500	3000	7.3 16.1
23222CJ	110 4.3307	200 7.8740	69.8 2.7480	2.0 0.08	130 5.1	183 7.2	853 192000	596 134000	0.32	2.12	3.15	2.07	0.0618	1900	2200	9.6 21.1
23222YM	110 4.3307	200 7.8740	69.8 2.7480	2.0 0.08	130 5.1	183 7.2	853 192000	596 134000	0.32	2.12	3.15	2.07	0.0618	1900	2200	9.6 21.1
22322CJ	110 4.3307	240 9.4488	80.0 3.1496	2.5 0.10	139 5.5	208 8.2	962 216000	733 165000	0.35	1.92	2.86	1.88	0.0654	2000	2300	18.0 39.5
22322YM	110 4.3307	240 9.4488	80.0 3.1496	2.5 0.10	139 5.5	208 8.2	962 216000	733 165000	0.35	1.92	2.86	1.88	0.0654	2000	2300	18.0 39.5
23322YM	110 4.3307	240 9.4488	92.1 3.6260	2.5 0.10	137 5.4	210 8.3	1070 240000	808 182000	0.40	1.67	2.49	1.63	0.0641	1500	1700	20.7 45.5
23024CJ	120 4.7244	180 7.0866	46.0 1.8110	2.0 0.08	134 5.3	169 6.6	564 127000	352 79200	0.22	3.14	4.67	3.07	0.0616	2300	2900	4.1 9.0
24024CJ	120 4.7244	180 7.0866	60.0 2.3622	2.0 0.08	131 5.2	164 6.5	642 144000	393 88400	0.30	2.25	3.34	2.20	0.0610	2000	2400	5.3 11.7
23124CJ	120 4.7244	200 7.8740	62.0 2.4409	2.0 0.08	142 5.6	189 7.4	803 180000	524 118000	0.30	2.28	3.39	2.23	0.0636	2000	2300	7.8 17.2

Continued on next page.

SPHERICAL ROLLER BEARINGS - *continued*

- Life calculations, shaft and housing fits, internal clearances, tolerances and other technical data for these bearings are found in the engineering section of this catalog.
- Bearings are available with a tapered bore for adapter type mounting. To order, add the suffix "K" to bearing number (e.g., 23120K).
- Consult your Timken representative for up-to-date information about the availability of the bearings you have selected.

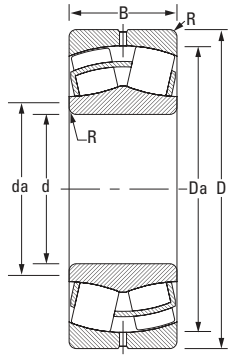

CJ

Bearing Number	d Bore	D O.D.	B Width	R Fillet[2] (max.)	Backing Diameter d_a Shaft	Backing Diameter D_a Housing	Load Ratings Static Load Rating C_0	Load Ratings Dynamic Load Rating C	Equivalent Radial Load Factors[1] Dynamic e	Dynamic $\frac{F_a}{F_r} \le e$ X = 1 Y	Dynamic $\frac{F_a}{F_r} > e$ X = .67 Y	Static In All Cases $X_0 = 1$ Y_0	Lubrication Life Adjustment Factor[4] C_g	Speed Ratings[3] Grease	Speed Ratings[3] Oil	Weight
	mm in.	mm in.	mm in.	mm in.	mm in.	mm in.	kN lbs.	kN lbs.						RPM	RPM	kg lbs.
23124YM	120 4.7244	200 7.8740	62.0 2.4409	2.0 0.08	142 5.6	189 7.4	803 180000	524 118000	0.30	2.28	3.39	2.23	0.0636	2000	2300	7.8 17.2
24124CJ	120 4.7244	200 7.8740	80.0 3.1496	2.0 0.08	136 5.4	181 7.1	923 207000	590 133000	0.39	1.74	2.59	1.70	0.0625	1600	1800	10.1 22.2
22224CJ	120 4.7244	215 8.4646	58.0 2.2835	2.0 0.08	142 5.6	192 7.6	667 150000	475 107000	0.27	2.51	3.74	2.46	0.0648	2400	2900	9.1 20.0
22224YM	120 4.7244	215 8.4646	58.0 2.2835	2.0 0.08	142 5.6	192 7.6	667 150000	475 107000	0.27	2.51	3.74	2.46	0.0648	2400	2900	9.1 20.0
23224YM	120 4.7244	215 8.4646	76.0 2.9921	2.0 0.08	140 5.5	197 7.8	977 220000	678 152000	0.32	2.09	3.11	2.04	0.0647	1700	2000	12.0 26.0
22324CJ	120 4.7244	260 10.2362	86.0 3.3858	2.5 0.10	151 5.9	225 8.9	1090 245000	825 185000	0.35	1.92	2.85	1.87	0.0680	1800	2100	22.6 49.6
22324YM	120 4.7244	260 10.2362	86.0 3.3858	2.5 0.10	151 5.9	225 8.9	1090 245000	825 185000	0.35	1.92	2.85	1.87	0.0704	1800	2100	22.6 49.6
23324YM	120 4.7244	260 10.2362	106.0 4.1732	2.5 0.10	147 5.8	226 8.9	1420 320000	1030 232000	0.43	1.57	2.34	1.54	0.0681	1300	1400	27.8 61.2
23926YM	130 5.1181	180 7.0866	37.0 1.4567	1.5 0.06	142 5.6	169 6.7	427 95900	245 55000	0.18	3.76	5.60	3.68	0.0880	2000	2500	2.8 6.2
23026CJ	130 5.1181	200 7.8740	52.0 2.0472	2.0 0.08	146 5.8	187 7.4	703 158000	446 100000	0.22	3.01	4.48	2.94	0.0654	2200	2700	5.9 13.0
24026CJ	130 5.1181	200 7.8740	69.0 2.7165	2.0 0.08	144 5.7	182 7.2	795 179000	501 113000	0.32	2.09	3.11	2.04	0.0642	1900	2200	7.9 17.3
23126CJ	130 5.1181	210 8.2677	64.0 2.5197	2.0 0.08	149 5.9	195 7.7	888 200000	562 126000	0.29	2.34	3.49	2.29	0.0663	1800	2100	8.6 19.0
23126YM	130 5.1181	210 8.2677	64.0 2.5197	2.0 0.08	149 5.9	195 7.7	888 200000	562 126000	0.29	2.34	3.49	2.29	0.0663	1800	2100	8.6 19.0
24126CJ	130 5.1181	210 8.2677	80.0 3.1496	2.0 0.08	147 5.8	190 7.5	967 217000	608 137000	0.36	1.85	2.76	1.81	0.0655	1500	1700	10.7 23.6
22226CJ	130 5.1181	230 9.0551	64.0 2.5197	2.5 0.10	152 6.0	206 8.1	805 181000	562 126000	0.27	2.47	3.68	2.42	0.0676	2200	2600	11.4 25.0
22226YM	130 5.1181	230 9.0551	64.0 2.5197	2.5 0.10	152 6.0	206 8.1	805 181000	562 126000	0.27	2.47	3.68	2.42	0.0676	2200	2600	11.4 25.0
23226YM	130 5.1181	230 9.0551	80.0 3.1496	2.5 0.10	151 5.9	211 8.3	1110 249000	759 171000	0.32	2.12	3.15	2.07	0.0676	1600	1800	14.0 31.0
22326CJ	130 5.1181	280 11.0236	93.0 3.6614	3.0 0.12	161 6.4	242 9.5	1270 286000	952 214000	0.35	1.92	2.85	1.87	0.0610	1700	1900	28.2 62.1
22326YM	130 5.1181	280 11.0236	93.0 3.6614	3.0 0.12	161 6.4	242 9.5	1270 286000	952 214000	0.35	1.92	2.85	1.87	0.0610	1700	1900	28.2 62.1
23326YM	130 5.1181	280 11.0236	112.0 4.4094	3.0 0.12	164 6.5	244 9.6	1550 348000	1090 245000	0.42	1.62	2.42	1.59	0.0600	1200	1300	34.0 74.7
23928YM	140 5.5118	190 7.4803	37.0 1.4567	1.5 0.06	152 6.0	179 7.1	456 102000	253 56900	0.17	4.01	5.97	3.92	0.0920	1900	2300	3.0 6.6

(1) These factors apply for both inch and metric calculations. See engineering section for instructions on use.
(2) Maximum shaft or housing fillet radius that bearing corners will clear.
* Available in standard shaker screen bearing design configuration (example: 223xxYMW33W800C4).
(3) See thermal speed ratings in the engineering section.
(4) Geometry constant for Lubrication Life Adjustment Factor a_{3l}. See "Bearing Load Ratings and Life Calculations."

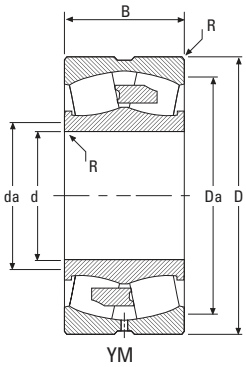

Bearing Number	d Bore	D O.D.	B Width	R Fillet[2] (max.)	Backing Diameter d_a Shaft	Backing Diameter D_a Housing	Load Ratings Static Load Rating C_0	Load Ratings Dynamic Load Rating C	Equivalent Radial load Factors[1] Dynamic e	Dynamic $\frac{F_a}{F_r} \le e$ X = 1 Y	Dynamic $\frac{F_a}{F_r} > e$ X = .67 Y	Static In All Cases $X_0 = 1$ Y_0	Lubrication Life Adjustment Factor[4] C_g	Speed Ratings[3] Grease	Speed Ratings[3] Oil	Weight
	mm in.	mm in.	mm in.	mm in.	mm in.	mm in.	kN lbs.	kN lbs.						RPM	RPM	kg lbs.
23028CJ	140 5.5118	210 8.2677	53.0 2.0866	2.0 0.08	156 6.1	197 7.8	764 173000	471 106000	0.22	3.14	4.67	3.07	0.0680	2000	2500	6.4 14.0
24028CJ	140 5.5118	210 8.2677	69.0 2.7165	2.0 0.08	154 6.1	192 7.6	899 202000	527 118000	0.31	2.21	3.29	2.16	0.0676	1700	2000	8.3 18.3
23128YM	140 5.5118	225 8.8583	68.0 2.6772	2.0 0.08	159 6.3	209 8.2	1010 228000	636 143000	0.29	2.37	3.52	2.31	0.0670	1700	2000	10.0 23.0
24128CJ	140 5.5118	225 8.8583	85.0 3.3465	2.0 0.08	156 6.2	203 8.0	1120 252000	701 158000	0.36	1.90	2.83	1.86	0.0684	1300	1500	13.0 28.6
26228YM	140 5.5118	240 9.4488	80.0 3.1496	2.5 0.10	161 6.3	217 8.6	1120 251000	726 163000	0.32	2.08	3.10	2.04	0.0693	1200	1400	14.7 32.4
22228CJ	140 5.5118	250 9.8425	68.0 2.6772	2.5 0.10	166 6.5	225 8.9	930 209000	646 145000	0.27	2.51	3.73	2.45	0.0713	2000	2400	14.4 31.7
22228YM	140 5.5118	250 9.8425	68.0 2.6772	2.5 0.10	166 6.5	225 8.9	930 209000	646 145000	0.27	2.51	3.73	2.45	0.0713	2000	2400	14.4 31.7
22328CJ	140 5.5118	300 11.8110	102.0 4.0157	3.0 0.12	174 6.9	262 10.3	1520 341000	1120 252000	0.36	1.88	2.81	1.84	0.0648	1500	1700	35.4 77.9
22328YM	140 5.5118	300 11.8110	102.0 4.0157	3.0 0.12	174 6.9	262 10.3	1520 341000	1120 252000	0.36	1.88	2.81	1.84	0.0648	1500	1700	35.4 77.9
23328YM	140 5.5118	300 11.8110	118.0 4.6457	3.0 0.12	175 6.9	261 10.3	1920 432000	1310 295000	0.41	1.64	2.45	1.61	0.0632	1000	1100	41.0 90.1
23030YM	150 5.9055	225 8.8583	56.0 2.2047	2.0 0.08	169 6.6	211 8.3	872 196000	521 117000	0.21	3.20	4.77	3.13	0.0714	1900	2300	7.8 17.0
24030CJ	150 5.9055	225 8.8583	75.0 2.9528	2.0 0.08	166 6.5	206 8.1	1000 226000	603 136000	0.31	2.18	3.24	2.13	0.0699	1600	1900	10.4 22.9
23130YM	150 5.9055	250 9.8425	80.0 3.1496	2.0 0.08	172 6.8	230 9.1	1320 298000	837 188000	0.31	2.20	3.27	2.15	0.0614	1500	1700	16.0 35.0
24130CJ	150 5.9055	250 9.8425	100.0 3.9370	2.0 0.08	169 6.7	225 8.9	1400 315000	901 203000	0.38	1.78	2.65	1.74	0.0603	1200	1300	19.7 43.4
22230CJ	150 5.9055	270 10.6299	73.0 2.8740	2.5 0.10	179 7.0	242 9.5	1100 247000	752 169000	0.27	2.52	3.75	2.46	0.0626	1800	2200	18.2 39.9
22230YM	150 5.9055	270 10.6299	73.0 2.8740	3.0 0.10	177 7.0	248 9.8	1200 269000	853 192000	0.25	2.74	4.08	2.68	0.0626	1800	2100	18.0 40.0
23230YM	150 5.9055	270 10.6299	96.0 3.7795	2.5 0.10	175 6.9	247 9.7	1590 357000	1060 239000	0.33	2.03	3.02	1.98	0.0625	1300	1500	24.0 53.0
22330CJ	150 5.9055	320 12.5984	108.0 4.2520	3.0 0.12	186 7.3	280 11.0	1720 386000	1260 283000	0.35	1.91	2.84	1.87	0.0667	1400	1600	42.6 93.6
22330YM	150 5.9055	320 12.5984	108.0 4.2520	3.0 0.12	186 7.3	280 11.0	1720 386000	1260 283000	0.35	1.91	2.84	1.87	0.0667	1400	1600	42.6 93.6
23330YM	150 5.9055	320 12.5984	128.0 5.0394	3.0 0.12	185 7.3	280 11.0	2130 478000	1480 332000	0.41	1.64	2.44	1.60	0.0654	960	1100	50.4 111
23932YM	160 6.2992	220 8.6614	45.0 1.7717	2.0 0.08	175 6.9	206 8.1	655 147000	348 78200	0.19	3.60	5.35	3.52	0.0724	1800	2100	5.1 11.1

Continued on next page.

SPHERICAL ROLLER BEARINGS - *continued*

- Life calculations, shaft and housing fits, internal clearances, tolerances and other technical data for these bearings are found in the engineering section of this catalog.
- Bearings are available with a tapered bore for adapter type mounting. To order, add the suffix "K" to bearing number (e.g., 23120K).
- Consult your Timken representative for up-to-date information about the availability of the bearings you have selected.

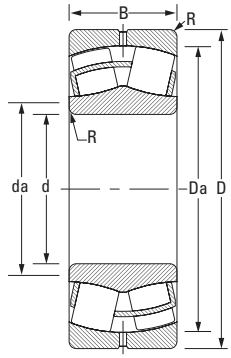

CJ

Bearing Number	d Bore	D O.D.	B Width	R Fillet[2] (max.)	Backing Diameter d_a Shaft	Backing Diameter D_a Housing	Load Ratings Static Load Rating C_0	Load Ratings Dynamic Load Rating C	Equivalent Radial Load Factors[1] Dynamic e	Dynamic $\frac{F_a}{F_r} \le e$ X = 1 Y	Dynamic $\frac{F_a}{F_r} > e$ X = .67 Y	Static In All Cases $X_0 = 1$ Y_0	Lubrication Life Adjustment Factor[4] C_g	Speed Ratings[3] Grease	Speed Ratings[3] Oil	Weight
	mm in.	mm in.	mm in.	mm in.	mm in.	mm in.	kN lbs.	kN lbs.						RPM	RPM	kg lbs.
23032YM	160 6.2992	240 9.4488	60.0 2.3622	2.0 0.08	179 7.0	225 8.9	979 220000	591 133000	0.21	3.20	4.77	3.13	0.0620	1700	2100	9.4 21.0
24032CJ	160 6.2992	240 9.4488	80.0 3.1496	2.0 0.08	173 6.8	224 8.8	1100 246000	665 150000	0.30	2.28	3.39	2.23	0.0611	1500	1800	12.6 27.8
23132YM	160 6.2992	270 10.6299	86.0 3.3858	2.0 0.08	189 7.4	244 9.6	1560 350000	968 218000	0.30	2.23	3.32	2.18	0.0633	1400	1600	20.1 44.1
22232CJ	160 6.2992	290 11.4173	80.0 3.1496	2.5 0.10	192 7.6	260 10.2	1280 288000	864 194000	0.27	2.47	3.67	2.41	0.0655	1700	2000	23.1 50.8
23232YM	160 6.2992	290 11.4173	104.0 4.0945	2.5 0.10	187 7.4	260 10.2	1680 377000	1090 246000	0.34	1.96	2.91	1.91	0.0645	1200	1400	30.0 66.0
22332CJ	160 6.2992	340 13.3858	114.0 4.4882	3.0 0.12	198 7.8	298 11.7	1920 432000	1400 314000	0.35	1.92	2.86	1.88	0.0702	1300	1500	50.6 111
22332YMB	160 6.2992	340 13.3858	114.0 4.4882	3.0 0.12	198 7.8	298 11.7	1920 432000	1400 314000	0.35	1.92	2.86	1.88	0.0702	1300	1500	50.6 111
23332YM	160 6.2992	340 13.3858	136.0 5.3543	3.0 0.12	202 8.0	297 11.7	2540 572000	1670 375000	0.42	1.62	2.41	1.58	0.0686	850	940	60.4 133
23934YM	170 6.6929	230 9.0551	45.0 1.7717	2.0 0.08	184 7.3	217 8.6	692 156000	371 83400	0.18	3.79	5.65	3.71	0.0627	1600	2000	5.3 11.7
23034YM	170 6.6929	260 10.2362	67.0 2.6378	2.0 0.08	192 7.6	243 9.6	1220 274000	724 163000	0.22	3.07	4.57	3.00	0.0649	1600	1900	12.8 28.1
24034CJ	170 6.6929	260 10.2362	90.0 3.5433	2.0 0.08	185 7.3	242 9.5	1430 322000	851 191000	0.32	2.12	3.15	2.07	0.0641	1300	1600	17.2 38.0
23134YM	170 6.6929	280 11.0236	88.0 3.4646	2.0 0.08	194 7.7	255 10.2	1670 375000	1010 226000	0.30	2.28	3.40	2.23	0.0654	1300	1500	21.5 47.3
24134CJ	170 6.6929	280 11.0236	109.0 4.2913	2.0 0.08	191 7.5	252 10.1	1840 413000	1110 248000	0.37	1.83	2.72	1.79	0.0657	980	1100	26.6 58.5
22234CJ	170 6.6929	310 12.2047	86.0 3.3858	3.0 0.12	201 7.9	278 10.9	1450 326000	999 225000	0.28	2.44	3.63	2.38	0.0672	1600	1900	28.5 62.7
23234YM	170 6.6929	310 12.2047	110.0 4.3307	3.0 0.12	200 7.9	276 10.9	1960 441000	1240 279000	0.34	1.97	2.94	1.93	0.0676	1100	1200	36.5 80.2
23036YM	180 7.0866	280 11.0236	74.0 2.9134	2.0 0.08	204 8.0	261 10.3	1420 321000	851 192000	0.23	2.95	4.40	2.89	0.0677	1500	1800	17.0 37.0
24036CJ	180 7.0866	280 11.0236	100.0 3.9370	2.0 0.08	198 7.8	260 10.2	1700 385000	992 223000	0.33	2.03	3.02	1.98	0.0671	1200	1500	23.0 50.0
23136YM	180 7.0866	300 11.8110	96.0 3.7795	2.5 0.10	205 8.1	273 10.8	1810 406000	1100 247000	0.31	2.20	3.28	2.15	0.0677	1200	1400	27.0 60.0
24136CJ	180 7.0866	300 11.8110	118.0 4.6457	2.5 0.10	201 7.9	275 10.8	2050 464000	1250 280000	0.38	1.78	2.65	1.74	0.0680	920	1000	33.0 74.0
22236CJ	180 7.0866	320 12.5984	86.0 3.3858	3.0 0.12	213 8.4	288 11.3	1540 346000	1030 231000	0.27	2.54	3.78	2.48	0.0698	1500	1700	30.0 65.0
23236YM	180 7.0866	320 12.5984	112.0 4.4094	3.0 0.12	209 8.2	288 11.3	2110 473000	1330 298000	0.34	2.00	2.97	1.95	0.0694	1000	1200	39.0 85.0

(1) These factors apply for both inch and metric calculations. See engineering section for instructions on use.
(2) Maximum shaft or housing fillet radius that bearing corners will clear.
* Available in standard shaker screen bearing design configuration (example: 223xxYMW33W800C4).
(3) See thermal speed ratings in the engineering section.
(4) Geometry constant for Lubrication Life Adjustment Factor a_{3l}. See "Bearing Load Ratings and Life Calculations."

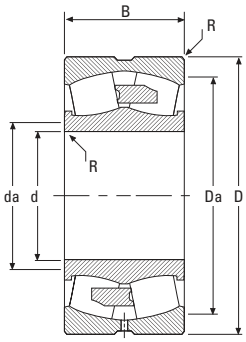

YM

Bearing Number	d Bore	D O.D.	B Width	R Fillet[2] (max.)	Backing Diameter d_a Shaft	Backing Diameter D_a Housing	Load Ratings Static Load Rating C_0	Load Ratings Dynamic Load Rating C	Equivalent Radial load Factors[1] e	Dynamic $\frac{F_a}{F_r} \le e$ X = 1 Y	Dynamic $\frac{F_a}{F_r} > e$ X = .67 Y	Static In All Cases $X_0 = 1$ Y_0	Lubrication Life Adjustment Factor[4] C_g	Speed Ratings[3] Grease	Speed Ratings[3] Oil	Weight
	mm in.	mm in.	mm in.	mm in.	mm in.	mm in.	kN lbs.	kN lbs.						RPM	RPM	kg lbs.
22336YMB	180 7.0866	380 14.9606	126.0 4.9606	3.0 0.12	222 8.8	334 13.1	2460 554000	1760 395000	0.34	1.98	2.94	1.93	0.0730	1100	1200	69.0 153
23938YM	190 7.4803	260 10.2362	52.0 2.0472	2.0 0.08	207 8.2	245 9.6	910 205000	480 108000	0.18	3.84	5.72	3.75	0.0677	1400	1700	8.1 18.0
23038YM	190 7.4803	290 11.4173	75.0 2.9528	2.0 0.08	213 8.4	271 10.7	1540 349000	901 203000	0.22	3.01	4.48	2.94	0.0698	1400	1700	18.0 39.0
24038CJ	190 7.4803	290 11.4173	100.0 3.9370	2.0 0.08	211 8.3	264 10.4	1810 407000	957 215000	0.31	2.16	3.22	2.12	0.0682	1200	1400	24.0 52.0
23138YM	190 7.4803	320 12.5984	104.0 4.0945	2.5 0.10	218 8.6	290 11.4	2090 470000	1250 282000	0.31	2.15	3.21	2.11	0.0716	1100	1300	34.0 75.0
24138CJ	190 7.4803	320 12.5984	128.0 5.0394	2.5 0.10	211 8.3	286 11.3	2310 520000	1350 305000	0.40	1.68	2.50	1.64	0.0710	860	950	42.0 92.0
22238YM	190 7.4803	340 13.3858	92.0 3.6220	3.0 0.12	224 8.8	306 12.0	1810 407000	1200 270000	0.27	2.53	3.77	2.48	0.0725	1400	1600	36.0 79.0
23238YM	190 7.4803	340 13.3858	120.0 4.7244	3.0 0.12	221 8.7	306 12.0	2390 536000	1490 335000	0.34	1.99	2.96	1.95	0.0714	960	1100	47.0 104
22338YMB	190 7.4803	400 15.7480	132.0 5.1969	4.0 0.16	236 9.3	350 13.8	2730 614000	1900 428000	0.34	1.97	2.94	1.93	0.0761	1000	1200	80.0 177
23940YM	200 7.8740	280 11.0236	60.0 2.3622	2.0 0.08	219 8.6	263 10.3	1140 256000	608 137000	0.19	3.65	5.43	3.57	0.0704	1400	1600	11.0 25.0
23040YM	200 7.8740	310 12.2047	82.0 3.2283	2.0 0.08	225 8.9	289 11.4	1760 398000	1040 234000	0.23	2.95	4.40	2.89	0.0723	1300	1600	23.0 50.0
24040CJ	200 7.8740	310 12.2047	109.0 4.2913	2.0 0.08	223 8.8	284 11.2	2080 468000	1120 251000	0.32	2.09	3.11	2.04	0.0710	1100	1300	30.0 66.0
23140YM	200 7.8740	340 13.3858	112.0 4.4094	2.5 0.10	230 9.0	308 12.1	2300 518000	1390 313000	0.31	2.15	3.20	2.10	0.0730	1100	1200	42.0 92.0
23140YMB	200 7.8740	340 13.3858	112.0 4.4094	2.5 0.10	230 9.0	308 12.1	2300 518000	1390 313000	0.31	2.15	3.20	2.10	0.0730	1100	1200	42.0 92.0
24140YMB	200 7.8740	340 13.3858	140.0 5.5118	2.5 0.10	226 8.9	308 12.1	2950 663000	1690 380000	0.39	1.74	2.59	1.70	0.0730	750	830	52.0 115
22240YMB	200 7.8740	360 14.1732	98.0 3.8583	3.0 0.12	236 9.3	323 12.7	2030 456000	1330 300000	0.27	2.50	3.72	2.44	0.0751	1300	1500	43.0 95.0
23240YM	200 7.8740	360 14.1732	128.0 5.0394	3.0 0.12	233 9.2	323 12.7	2720 611000	1670 376000	0.35	1.95	2.90	1.91	0.0746	890	1000	56.0 124
26340YM	200 7.8740	380 14.9606	126.0 4.9606	4.0 0.16	240 9.4	337 13.3	2710 610000	1740 391000	0.33	2.02	3.01	1.98	0.0759	700	780	65.8 145
22340YMB	200 7.8740	420 16.5354	138.0 5.4331	4.0 0.16	247 9.7	369 14.5	2950 663000	2070 465000	0.33	2.02	3.01	1.98	0.0778	970	1100	93.0 204
23340YM	200 7.8740	420 16.5354	165.0 6.4961	4.0 0.16	246 9.7	366 14.4	3750 844000	2450 550000	0.41	1.66	2.47	1.62	0.0784	640	700	111 244
23944YM	220 8.6614	300 11.8110	60.0 2.3622	2.0 0.08	239 9.4	283 11.2	1220 275000	632 142000	0.17	3.94	5.87	3.85	0.0743	1200	1500	12.0 27.0

Continued on next page.

SPHERICAL ROLLER BEARINGS - *continued*

- Life calculations, shaft and housing fits, internal clearances, tolerances and other technical data for these bearings are found in the engineering section of this catalog.
- Bearings are available with a tapered bore for adapter type mounting. To order, add the suffix "K" to bearing number (e.g., 23120K).
- Consult your Timken representative for up-to-date information about the availability of the bearings you have selected.

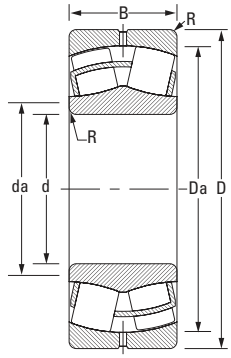

CJ

Bearing Number	d Bore	D O.D.	B Width	R Fillet[2] (max.)	Backing Diameter d_a Shaft	Backing Diameter D_a Housing	Load Ratings Static Load Rating C_0	Load Ratings Dynamic Load Rating C	Equivalent Radial Load Factors[1] Dynamic e	Dynamic $\frac{F_a}{F_r} \le e$ X = 1 Y	Dynamic $\frac{F_a}{F_r} > e$ X = .67 Y	Static In All Cases $X_0 = 1$ Y_0	Lubrication Life Adjustment Factor[4] C_g	Speed Ratings[3] Grease	Speed Ratings[3] Oil	Weight
	mm in.	mm in.	mm in.	mm in.	mm in.	mm in.	kN lbs.	kN lbs.						RPM	RPM	kg lbs.
23044YM	220 8.6614	340 13.3858	90.0 3.5433	2.5 0.10	247 9.7	313 12.3	1990 447000	1130 254000	0.24	2.77	4.13	2.71	0.0767	1200	1400	30.0 66.0
24044YM	220 8.6614	340 13.3858	118.0 4.6457	2.5 0.10	245 9.6	313 12.3	2740 616000	1450 326000	0.32	2.14	3.18	2.09	0.0762	930	1100	39.0 86.0
23144YM	220 8.6614	370 14.5669	120.0 4.7244	3.0 0.12	252 9.9	336 13.2	2760 621000	1630 366000	0.31	2.17	3.24	2.12	0.0777	940	1100	52.0 115
23144YMB	220 8.6614	370 14.5669	120.0 4.7244	3.0 0.12	252 9.9	336 13.2	2760 621000	1630 366000	0.31	2.17	3.24	2.12	0.0777	940	1100	52.0 115
24144YMB	220 8.6614	370 14.5669	150.0 5.9055	3.0 0.12	248 9.8	337 13.3	3250 730000	1870 421000	0.36	1.86	2.77	1.82	0.0773	690	760	65.0 144
22244YMB	220 8.6614	400 15.7480	108.0 4.2520	3.0 0.12	261 10.3	359 14.1	2330 524000	1550 349000	0.27	2.51	3.73	2.45	0.0810	1200	1400	59.0 131
23244YM	220 8.6614	400 15.7480	144.0 5.6693	3.0 0.12	257 10.1	359 14.1	3380 760000	2080 467000	0.35	1.95	2.90	1.90	0.0790	780	870	79.0 174
26344YM	220 8.6614	420 16.5354	138.0 5.4331	4.0 0.16	265 10.4	372 14.6	3280 738000	2080 468000	0.33	2.04	3.03	1.99	0.0808	610	680	88.2 194
22344YMB	220 8.6614	460 18.1102	145.0 5.7087	4.0 0.16	273 10.7	404 15.9	3490 784000	2400 540000	0.32	2.08	3.10	2.04	0.0834	840	950	116 257
23344YM	220 8.6614	460 18.1102	180.0 7.0866	4.0 0.16	269 10.6	402 15.8	4500 1010000	2900 652000	0.40	1.67	2.48	1.63	0.0832	560	610	145 319
23948YM	240 9.4488	320 12.5984	60.0 2.3622	2.0 0.08	260 10.2	303 11.9	1360 306000	666 150000	0.16	4.19	6.24	4.09	0.0782	1100	1300	13.0 29.0
23048YM	240 9.4488	360 14.1732	92.0 3.6220	2.5 0.10	267 10.5	334 13.1	2150 484000	1180 266000	0.23	2.91	4.34	2.85	0.0797	1100	1300	33.0 72.0
24048YM	240 9.4488	360 14.1732	118.0 4.6457	2.5 0.10	265 10.4	334 13.1	2920 657000	1500 338000	0.29	2.31	3.44	2.26	0.0797	850	980	42.0 92.0
23148YMB	240 9.4488	400 15.7480	128.0 5.0394	3.0 0.12	276 10.9	364 14.3	3200 719000	1850 415000	0.30	2.28	3.40	2.23	0.0817	850	970	65.0 142
24148YMB	240 9.4488	400 15.7480	160.0 6.2992	3.0 0.12	271 10.7	364 14.3	4090 919000	2250 505000	0.37	1.80	2.68	1.76	0.0817	580	640	81.0 178
22248YMB	240 9.4488	440 17.3228	120.0 4.7244	3.0 0.12	284 11.2	395 15.6	2970 668000	1960 441000	0.27	2.46	3.67	2.41	0.0840	1000	1200	80.0 177
23248YM	240 9.4488	440 17.3228	160.0 6.2992	3.0 0.12	281 11.1	394 15.5	4190 942000	2540 571000	0.35	1.92	2.86	1.88	0.0839	680	760	107 236
26348YM	240 9.4488	460 18.1102	147.0 5.7874	4.0 0.16	286 11.3	410 16.2	3720 836000	2430 547000	0.32	2.08	3.10	2.04	0.0852	550	610	113 248
22348YMB	240 9.4488	500 19.6850	155.0 6.1024	4.0 0.16	297 11.7	439 17.3	3990 897000	2740 616000	0.32	2.10	3.13	2.05	0.0880	760	850	147 324
23348YM	240 9.4488	500 19.6850	195.0 7.6772	4.0 0.16	293 11.5	437 17.2	5320 1200000	3380 761000	0.40	1.67	2.49	1.64	0.0878	500	540	185 407
26250YM	250 9.8425	410 16.1417	128.0 5.0394	3.0 0.12	284 11.2	374 14.7	3180 714000	1830 412000	0.30	2.28	3.39	2.23	0.0831	580	650	64.0 141

(1) These factors apply for both inch and metric calculations. See engineering section for instructions on use.
(2) Maximum shaft or housing fillet radius that bearing corners will clear.
* Available in standard shaker screen bearing design configuration (example: 223xxYMW33W800C4).
(3) See thermal speed ratings in the engineering section.
(4) Geometry constant for Lubrication Life Adjustment Factor a_{3l}. See "Bearing Load Ratings and Life Calculations."

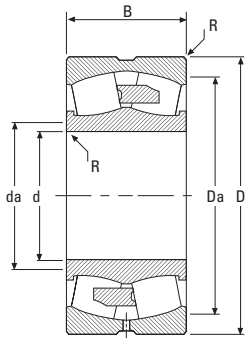

YM

Bearing Number	d Bore	D O.D.	B Width	R Fillet[2] (max.)	Backing Diameter d_a Shaft	Backing Diameter D_a Housing	Load Ratings Static Load Rating C_0	Load Ratings Dynamic Load Rating C	Equivalent Radial load Factors[1] Dynamic e	Dynamic $\frac{F_a}{F_r} \le e$ X = 1 Y	Dynamic $\frac{F_a}{F_r} > e$ X = .67 Y	Static In All Cases $X_0 = 1$ Y_0	Lubrication Life Adjustment Factor[4] C_g	Speed Ratings[3] Grease	Speed Ratings[3] Oil	Weight
	mm in.	mm in.	mm in.	mm in.	mm in.	mm in.	kN lbs.	kN lbs.						RPM	RPM	kg lbs.
23952YM	260 10.2362	360 14.1732	75.0 2.9528	2.0 0.08	284 11.2	339 13.3	1880 422000	951 214000	0.18	3.74	5.56	3.65	0.0830	1000	1200	23.0 50.0
23052YM	260 10.2362	400 15.7480	104.0 4.0945	3.0 0.12	291 11.5	369 14.5	2770 622000	1540 345000	0.24	2.85	4.24	2.78	0.0847	990	1200	47.0 104
23052YMB	260 10.2362	400 15.7480	104.0 4.0945	3.0 0.12	291 11.5	369 14.5	2770 622000	1540 345000	0.24	2.85	4.24	2.78	0.0847	990	1200	47.0 104
24052YM	260 10.2362	400 15.7480	140.0 5.5118	3.0 0.12	288 11.3	369 14.5	3870 871000	1990 448000	0.32	2.12	3.15	2.07	0.0846	750	860	64.0 140
23152YMB	260 10.2362	440 17.3228	144.0 5.6693	3.0 0.12	302 11.9	400 15.7	3970 891000	2240 504000	0.30	2.23	3.31	2.18	0.0867	760	860	89.0 197
24152YMB	260 10.2362	440 17.3228	180.0 7.0866	3.0 0.12	296 11.7	398 15.7	4840 1090000	2630 592000	0.37	1.82	2.70	1.78	0.0865	530	570	112 246
22252YMB	260 10.2362	480 18.8976	130.0 5.1181	4.0 0.16	309 12.2	430 16.9	3530 793000	2300 518000	0.27	2.46	3.66	2.41	0.0887	910	1100	104 230
23252YM	260 10.2362	480 18.8976	174.0 6.8504	4.0 0.16	308 12.1	430 16.9	4880 1100000	2930 658000	0.34	1.98	2.95	1.94	0.0893	610	680	139 307
22352YMB	260 10.2362	540 21.2598	165.0 6.4961	5.0 0.20	321 12.6	475 18.7	4590 1030000	3130 703000	0.32	2.13	3.17	2.08	0.0924	680	770	182 401
23352YM	260 10.2362	540 21.2598	206.0 8.1102	5.0 0.20	318 12.5	473 18.6	6040 1360000	3830 861000	0.39	1.71	2.54	1.67	0.0923	450	480	227 501
23956YMB	280 11.0236	380 14.9606	75.0 2.9528	2.0 0.08	304 12.0	360 14.2	2000 450000	1000 225000	0.17	3.95	5.88	3.86	0.0865	920	1100	24.0 54.0
23056YMB	280 11.0236	420 16.5354	106.0 4.1732	3.0 0.12	312 12.3	389 15.3	2830 636000	1540 346000	0.23	2.92	4.35	2.86	0.0879	930	1100	51.0 113
24056YMB	280 11.0236	420 16.5354	140.0 5.5118	3.0 0.12	310 12.2	388 15.3	4130 927000	2030 456000	0.30	2.25	3.35	2.20	0.0883	690	790	68.0 149
23156YMB	280 11.0236	460 18.1102	146.0 5.7480	4.0 0.16	320 12.6	419 16.5	4200 944000	2330 524000	0.30	2.26	3.36	2.21	0.0900	710	800	96.0 211
24156YMB	280 11.0236	460 18.1102	180.0 7.0866	4.0 0.16	319 12.6	419 16.5	5100 1150000	2670 601000	0.36	1.86	2.77	1.82	0.0899	490	530	118 260
22256YMB	280 11.0236	500 19.6850	130.0 5.1181	4.0 0.16	331 13.0	449 17.7	3780 850000	2360 530000	0.26	2.62	3.91	2.57	0.0927	850	990	110 242
23256YMB	280 11.0236	500 19.6850	176.0 6.9291	4.0 0.16	329 13.0	450 17.7	5290 1190000	3070 689000	0.33	2.07	3.08	2.02	0.0921	560	620	149 328
22356YMB	280 11.0236	580 22.8346	175.0 6.8898	5.0 0.20	345 13.6	511 20.1	5320 1200000	3590 806000	0.32	2.13	3.17	2.08	0.0968	620	690	222 490
23356YM	280 11.0236	580 22.8346	224.0 8.8189	5.0 0.20	341 13.4	508 20.0	7100 1600000	4430 997000	0.40	1.69	2.52	1.65	0.0966	400	430	284 627
23960YMB	300 11.8110	420 16.5354	90.0 3.5433	2.5 0.10	328 12.9	394 15.5	2650 596000	1330 300000	0.19	3.59	5.34	3.51	0.0911	840	1000	38.0 84.0
23060YMB	300 11.8110	460 18.1102	118.0 4.6457	3.0 0.12	336 13.2	425 16.8	3600 809000	1970 442000	0.24	2.87	4.27	2.80	0.0926	830	980	71.0 156

Continued on next page.

SPHERICAL ROLLER BEARINGS - *continued*

- Life calculations, shaft and housing fits, internal clearances, tolerances and other technical data for these bearings are found in the engineering section of this catalog.
- Bearings are available with a tapered bore for adapter type mounting. To order, add the suffix "K" to bearing number (e.g., 23120K).
- Consult your Timken representative for up-to-date information about the availability of the bearings you have selected.

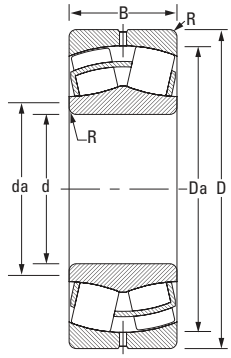

CJ

Bearing Number	d Bore	D O.D.	B Width	R Fillet[2] (max.)	Backing Diameter d_a Shaft	Backing Diameter D_a Housing	Load Ratings Static Load Rating C_0	Load Ratings Dynamic Load Rating C	Equivalent Radial Load Factors[1] Dynamic e	Dynamic $\frac{F_a}{F_r} \le e$ X = 1 Y	Dynamic $\frac{F_a}{F_r} > e$ X = .67 Y	Static In All Cases $X_0 = 1$ Y_0	Lubrication Life Adjustment Factor[4] C_g	Speed Ratings[3] Grease	Speed Ratings[3] Oil	Weight
	mm in.	mm in.	mm in.	mm in.	mm in.	mm in.	kN lbs.	kN lbs.						RPM	RPM	kg lbs.
24060YMB	**300** 11.8110	**460** 18.1102	**160.0** 6.2992	**3.0** 0.12	**334** 13.1	**423** 16.7	**5230** 1180000	**2560** 576000	**0.32**	**2.11**	**3.13**	**2.06**	**0.0928**	**620**	**700**	**96.0** 211
23160YMB	**300** 11.8110	**500** 19.6850	**160.0** 6.2992	**4.0** 0.16	**345** 13.6	**453** 17.8	**5160** 1160000	**2810** 632000	**0.30**	**2.25**	**3.35**	**2.20**	**0.0946**	**630**	**710**	**126** 278
24160YMB	**300** 11.8110	**500** 19.6850	**200.0** 7.8740	**4.0** 0.16	**338** 13.3	**455** 17.9	**6320** 1420000	**3380** 759000	**0.37**	**1.82**	**2.71**	**1.78**	**0.0942**	**430**	**460**	**158** 347
22260YMB	**300** 11.8110	**540** 21.2598	**140.0** 5.5118	**4.0** 0.16	**355** 14.0	**484** 19.1	**4430** 997000	**2760** 621000	**0.26**	**2.59**	**3.86**	**2.53**	**0.0965**	**770**	**890**	**139** 306
23260YMB	**300** 11.8110	**540** 21.2598	**192.0** 7.5591	**4.0** 0.16	**353** 13.9	**482** 19.0	**6210** 1400000	**3510** 788000	**0.34**	**2.00**	**2.98**	**1.96**	**0.0967**	**510**	**560**	**191** 420
23964YMB	**320** 12.5984	**440** 17.3228	**90.0** 3.5433	**2.5** 0.10	**349** 13.8	**414** 16.3	**2800** 629000	**1360** 305000	**0.18**	**3.79**	**5.65**	**3.71**	**0.0946**	**780**	**930**	**40.0** 89.0
23064YMB	**320** 12.5984	**480** 18.8976	**121.0** 4.7638	**3.0** 0.12	**357** 14.1	**444** 17.5	**3910** 880000	**2040** 458000	**0.23**	**2.93**	**4.36**	**2.86**	**0.0962**	**780**	**910**	**76.0** 168
24064YMB	**320** 12.5984	**480** 18.8976	**160.0** 6.2992	**3.0** 0.12	**354** 13.9	**444** 17.5	**5420** 1220000	**2620** 588000	**0.30**	**2.24**	**3.34**	**2.19**	**0.0961**	**580**	**660**	**101** 222
23164YMB	**320** 12.5984	**540** 21.2598	**176.0** 6.9291	**4.0** 0.16	**367** 14.4	**490** 19.3	**6000** 1350000	**3330** 749000	**0.31**	**2.14**	**3.19**	**2.10**	**0.0988**	**580**	**650**	**164** 361
24164YMB	**320** 12.5984	**540** 21.2598	**218.0** 8.5827	**4.0** 0.16	**362** 14.3	**489** 19.3	**7580** 1710000	**3980** 894000	**0.38**	**1.77**	**2.63**	**1.73**	**0.0986**	**380**	**410**	**203** 448
22264YMB	**320** 12.5984	**580** 22.8346	**150.0** 5.9055	**4.0** 0.16	**380** 15.0	**519** 20.4	**5040** 1130000	**3110** 700000	**0.26**	**2.58**	**3.84**	**2.52**	**0.1009**	**710**	**820**	**173** 381
23264YMB	**320** 12.5984	**580** 22.8346	**208.0** 8.1890	**4.0** 0.16	**379** 14.9	**516** 20.3	**7140** 1610000	**3960** 891000	**0.34**	**1.98**	**2.94**	**1.93**	**0.1013**	**460**	**510**	**240** 528
23968YMB	**340** 13.3858	**460** 18.1102	**90.0** 3.5433	**2.5** 0.10	**369** 14.5	**435** 17.1	**3020** 678000	**1420** 320000	**0.17**	**3.98**	**5.93**	**3.89**	**0.0983**	**730**	**860**	**43.0** 94.0
23068YMB	**340** 13.3858	**520** 20.4724	**133.0** 5.2362	**4.0** 0.16	**384** 15.1	**481** 18.9	**4670** 1050000	**2430** 546000	**0.23**	**2.96**	**4.40**	**2.89**	**0.1005**	**710**	**830**	**101** 223
24068YMB	**340** 13.3858	**520** 20.4724	**180.0** 7.0866	**4.0** 0.16	**377** 14.9	**479** 18.9	**6590** 1480000	**3190** 717000	**0.32**	**2.14**	**3.18**	**2.09**	**0.1004**	**530**	**600**	**137** 302
23168YMB	**340** 13.3858	**580** 22.8346	**190.0** 7.4803	**4.0** 0.16	**397** 15.6	**526** 20.7	**6900** 1550000	**3750** 843000	**0.30**	**2.22**	**3.30**	**2.17**	**0.1033**	**530**	**590**	**206** 455
24168YMB	**340** 13.3858	**580** 22.8346	**243.0** 9.5669	**4.0** 0.16	**385** 15.2	**525** 20.7	**8970** 2020000	**4720** 1060000	**0.39**	**1.75**	**2.61**	**1.71**	**0.1033**	**340**	**370**	**264** 582
23268YMB	**340** 13.3858	**620** 24.4094	**224.0** 8.8189	**5.0** 0.20	**399** 15.7	**554** 21.8	**8290** 1860000	**4700** 1060000	**0.35**	**1.91**	**2.84**	**1.86**	**0.1051**	**420**	**460**	**296** 653
23972YMB	**360** 14.1732	**480** 18.8976	**90.0** 3.5433	**2.5** 0.10	**389** 15.3	**455** 17.9	**3170** 712000	**1460** 328000	**0.16**	**4.12**	**6.13**	**4.03**	**0.1013**	**680**	**810**	**45.0** 98.0
23072YMB	**360** 14.1732	**540** 21.2598	**134.0** 5.2756	**4.0** 0.16	**403** 15.9	**499** 19.7	**4640** 1040000	**2390** 538000	**0.23**	**2.94**	**4.38**	**2.88**	**0.1035**	**680**	**800**	**107** 236
24072YMB	**360** 14.1732	**540** 21.2598	**180.0** 7.0866	**4.0** 0.16	**398** 15.7	**500** 19.7	**6900** 1550000	**3270** 736000	**0.30**	**2.24**	**3.33**	**2.19**	**0.1036**	**500**	**560**	**144** 316

(1) These factors apply for both inch and metric calculations. See engineering section for instructions on use.
(2) Maximum shaft or housing fillet radius that bearing corners will clear.
* Available in standard shaker screen bearing design configuration (example: 223xxYMW33W800C4).
(3) See thermal speed ratings in the engineering section.
(4) Geometry constant for Lubrication Life Adjustment Factor a_{3l}. See "Bearing Load Ratings and Life Calculations."

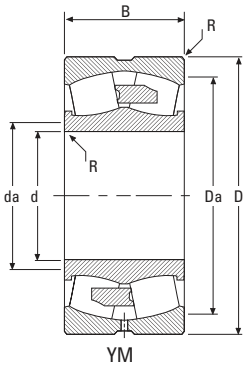

Bearing Number	d Bore	D O.D.	B Width	R Fillet[2] (max.)	Backing Diameter d_a Shaft	Backing Diameter D_a Housing	Load Ratings Static Load Rating C_0	Load Ratings Dynamic Load Rating C	Equivalent Radial load Factors[1] e	Dynamic $\frac{F_a}{F_r} \le e$ X = 1 Y	Dynamic $\frac{F_a}{F_r} > e$ X = .67 Y	Static In All Cases $X_0 = 1$ Y_0	Lubrication Life Adjustment Factor[4] C_g	Speed Ratings[3] Grease	Speed Ratings[3] Oil	Weight
	mm in.	mm in.	mm in.	mm in.	mm in.	mm in.	kN lbs.	kN lbs.						RPM	RPM	kg lbs.
23172YMB	360 14.1732	600 23.6220	192.0 7.5591	4.0 0.16	419 16.5	546 21.5	7360 1650000	3880 872000	0.29	2.29	3.42	2.24	0.1065	500	560	218 480
24172YMB	360 14.1732	600 23.6220	243.0 9.5669	4.0 0.16	406 16.0	545 21.4	9620 2160000	4890 1100000	0.38	1.79	2.67	1.75	0.1064	320	340	276 608
23272YMB	360 14.1732	650 25.5906	232.0 9.1339	5.0 0.20	420 16.5	583 22.9	8900 2000000	5040 1130000	0.35	1.95	2.91	1.91	0.1086	400	430	334 737
23976YMB	380 14.9606	520 20.4724	106.0 4.1732	3.0 0.12	416 16.4	488 19.2	3970 893000	1810 407000	0.18	3.80	5.66	3.72	0.1057	640	750	66.0 145
23076YMB	380 14.9606	560 22.0472	135.0 5.3150	4.0 0.16	422 16.6	520 20.5	5150 1160000	2590 581000	0.22	3.08	4.58	3.01	0.1068	630	740	112 248
24076YMB	380 14.9606	560 22.0472	180.0 7.0866	4.0 0.16	418 16.4	520 20.5	7150 1610000	3360 755000	0.29	2.32	3.45	2.27	0.1062	470	530	150 330
23176YMB	380 14.9606	620 24.4094	194.0 7.6378	4.0 0.16	431 17.0	566 22.3	7670 1720000	4100 922000	0.30	2.28	3.39	2.23	0.1090	470	530	229 505
24176YMB	380 14.9606	620 24.4094	243.0 9.5669	4.0 0.16	427 16.8	565 22.3	10200 2290000	5080 1140000	0.36	1.87	2.79	1.83	0.1097	300	320	287 633
23276YMB	380 14.9606	680 26.7717	240.0 9.4488	5.0 0.20	442 17.4	611 24.1	9630 2170000	5430 1220000	0.34	1.98	2.95	1.94	0.1119	370	400	376 828
23980YMB	400 15.7480	540 21.2598	106.0 4.1732	3.0 0.12	436 17.2	511 20.1	4050 910000	1850 415000	0.17	3.99	5.94	3.90	0.1086	600	720	69.0 151
23080YMB	400 15.7480	600 23.6220	148.0 5.8268	4.0 0.16	447 17.6	555 21.9	6020 1350000	3050 685000	0.23	2.98	4.44	2.92	0.1109	590	690	146 321
24080YMB	400 15.7480	600 23.6220	200.0 7.8740	4.0 0.16	442 17.4	555 21.9	8550 1920000	3990 898000	0.30	2.24	3.33	2.19	0.1108	430	480	197 434
23180YMB	400 15.7480	650 25.5906	200.0 7.8740	5.0 0.20	454 17.9	594 23.4	8210 1850000	4350 979000	0.29	2.32	3.46	2.27	0.1123	440	500	258 570
24180YMB	400 15.7480	650 25.5906	250.0 9.8425	5.0 0.20	449 17.7	594 23.4	10500 2350000	5280 1190000	0.35	1.91	2.84	1.87	0.1123	290	310	323 712
23280YMB	400 15.7480	720 28.3465	256.0 10.0787	5.0 0.20	466 18.4	646 25.4	11000 2460000	6110 1370000	0.34	1.96	2.93	1.92	0.1159	340	370	452 996
22380YMB	400 15.7480	820 32.2835	243.0 9.5669	6.0 0.24	496 19.5	729 28.7	10200 2290000	6570 1480000	0.30	2.28	3.40	2.23	0.1213	390	430	613 1350
23984YMB	420 16.5354	560 22.0472	106.0 4.1732	3.0 0.12	454 17.9	531 20.9	4270 961000	1930 434000	0.16	4.14	6.17	4.05	0.1117	570	670	72.0 158
23084YMB	420 16.5354	620 24.4094	150.0 5.9055	4.0 0.16	467 18.4	576 22.7	6430 1450000	3170 713000	0.22	3.05	4.54	2.98	0.1139	560	650	154 339
24084YMB	420 16.5354	620 24.4094	200.0 7.8740	4.0 0.16	463 18.2	575 22.7	8710 1960000	4010 901000	0.29	2.37	3.52	2.31	0.1138	410	460	205 451
23184YMB	420 16.5354	700 27.5591	224.0 8.8189	5.0 0.20	480 18.9	637 25.1	9760 2190000	5210 1170000	0.31	2.21	3.28	2.16	0.1166	410	450	346 762
24184YMB	420 16.5354	700 27.5591	280.0 11.0236	5.0 0.20	473 18.6	637 25.1	12500 2810000	6330 1420000	0.37	1.81	2.70	1.77	0.1166	260	280	432 953

Continued on next page.

SPHERICAL ROLLER BEARINGS - *continued*

- Life calculations, shaft and housing fits, internal clearances, tolerances and other technical data for these bearings are found in the engineering section of this catalog.
- Bearings are available with a tapered bore for adapter type mounting. To order, add the suffix "K" to bearing number (e.g., 23120K).
- Consult your Timken representative for up-to-date information about the availability of the bearings you have selected.

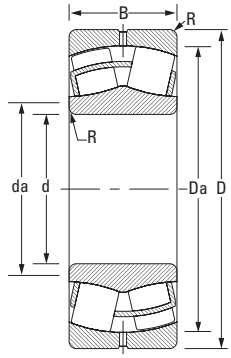

CJ

Bearing Number	d Bore	D O.D.	B Width	R Fillet[2] (max.)	Backing Diameter d_a Shaft	Backing Diameter D_a Housing	Load Ratings Static Load Rating C_0	Load Ratings Dynamic Load Rating C	Equivalent Radial Load Factors[1] Dynamic e	Dynamic $\frac{F_a}{F_r} \le e$ X = 1 Y	Dynamic $\frac{F_a}{F_r} > e$ X = .67 Y	Static In All Cases $X_0 = 1$ Y_0	Lubrication Life Adjustment Factor[4] C_g	Speed Ratings[3] Grease	Speed Ratings[3] Oil	Weight
	mm in.	mm in.	mm in.	mm in.	mm in.	mm in.	kN lbs.	kN lbs.						RPM	RPM	kg lbs.
23284YMB	420 16.5354	760 29.9213	272.0 10.7087	6.0 0.24	490 19.3	681 26.8	12000 2690000	6670 1500000	0.35	1.90	2.83	1.86	0.1187	320	350	537 1180
23988YMB	440 17.3228	600 23.6220	118.0 4.6457	3.0 0.12	479 18.9	566 22.3	5080 1140000	2340 525000	0.17	3.93	5.85	3.84	0.1157	530	630	97.0 213
23088YMB	440 17.3228	650 25.5906	157.0 6.1811	5.0 0.20	489 19.3	603 23.8	7050 1590000	3460 777000	0.22	3.04	4.53	2.97	0.1173	520	610	177 390
24088YMB	440 17.3228	650 25.5906	212.0 8.3465	5.0 0.20	485 19.1	603 23.7	9870 2220000	4480 1010000	0.29	2.31	3.44	2.26	0.1173	380	430	239 527
23188YMB	440 17.3228	720 28.3465	226.0 8.8976	5.0 0.20	500 19.7	657 25.9	10400 2340000	5440 1220000	0.30	2.26	3.37	2.21	0.1198	380	430	361 797
24188YMB	440 17.3228	720 28.3465	280.0 11.0236	5.0 0.20	495 19.5	656 25.8	13100 2930000	6450 1450000	0.36	1.88	2.79	1.84	0.1197	250	260	448 987
23288YMB	440 17.3228	790 31.1024	280.0 11.0236	6.0 0.24	512 20.1	710 27.9	13400 3010000	7350 1650000	0.35	1.95	2.91	1.91	0.1231	300	320	593 1310
23992YMB	460 18.1102	620 24.4094	118.0 4.6457	3.0 0.12	504 19.9	582 22.9	4700 1060000	2050 460000	0.16	4.13	6.15	4.04	0.1187	520	620	101 221
23092YMB	460 18.1102	680 26.7717	163.0 6.4173	5.0 0.20	512 20.1	631 24.8	7660 1720000	3740 840000	0.22	3.06	4.56	2.99	0.1207	500	570	202 444
24092YMB	460 18.1102	680 26.7717	218.0 8.5827	5.0 0.20	507 20.0	630 24.8	10400 2350000	4750 1070000	0.28	2.37	3.53	2.32	0.1207	360	410	270 593
23192YMB	460 18.1102	760 29.9213	240.0 9.4488	6.0 0.24	524 20.6	692 27.2	11200 2530000	5920 1330000	0.30	2.24	3.33	2.19	0.1230	370	410	433 953
24192YMB	460 18.1102	760 29.9213	300.0 11.8110	6.0 0.24	517 20.4	692 27.2	15000 3360000	7420 1670000	0.37	1.82	2.71	1.78	0.1239	220	240	542 1190
23292YMB	460 18.1102	830 32.6772	296.0 11.6535	6.0 0.24	535 21.1	746 29.4	14200 3190000	7870 1770000	0.34	1.96	2.93	1.92	0.1259	280	310	697 1530
23996YMB	480 18.8976	650 25.5906	128.0 5.0394	4.0 0.16	522 20.6	614 24.2	5430 1220000	2490 559000	0.17	3.86	5.75	3.78	0.1224	500	590	121 267
23096YMB	480 18.8976	700 27.5591	165.0 6.4961	5.0 0.20	532 21.0	650 25.6	8070 1810000	3840 863000	0.22	3.14	4.67	3.07	0.1236	470	550	211 465
24096YMB	480 18.8976	700 27.5591	218.0 8.5827	5.0 0.20	527 20.7	652 25.7	11000 2470000	4970 1120000	0.28	2.45	3.64	2.39	0.1233	340	380	279 614
23196YMB	480 18.8976	790 31.1024	248.0 9.7638	6.0 0.24	547 21.5	719 28.3	12600 2830000	6480 1460000	0.30	2.26	3.36	2.21	0.1269	340	370	482 1060
24196YMB	480 18.8976	790 31.1024	308.0 12.1260	6.0 0.24	542 21.3	717 28.2	16300 3660000	7840 1760000	0.37	1.85	2.75	1.80	0.1266	210	220	598 1320
23296YMB	480 18.8976	870 34.2520	310.0 12.2047	6.0 0.24	561 22.1	779 30.7	16600 3740000	8940 2010000	0.35	1.92	2.85	1.87	0.1305	250	270	805 1770
239/500YMB	500 19.6850	670 26.3780	128.0 5.0394	4.0 0.16	544 21.4	634 25.0	5730 1290000	2540 571000	0.17	4.02	5.98	3.93	0.1251	470	560	126 276
230/500YMB	500 19.6850	720 28.3465	167.0 6.5748	5.0 0.20	551 21.7	673 26.5	8260 1860000	3950 889000	0.21	3.26	4.85	3.18	0.1263	460	530	221 486

(1) These factors apply for both inch and metric calculations. See engineering section for instructions on use.
(2) Maximum shaft or housing fillet radius that bearing corners will clear.
* Available in standard shaker screen bearing design configuration (example: 223xxYMW33W800C4).
(3) See thermal speed ratings in the engineering section.
(4) Geometry constant for Lubrication Life Adjustment Factor a_{3l}. See "Bearing Load Ratings and Life Calculations."

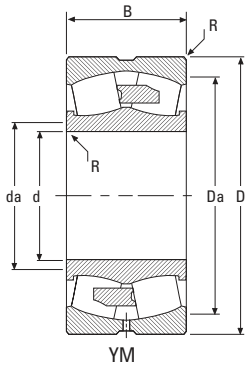

Bearing Number	d Bore	D O.D.	B Width	R Fillet[2] (max.)	Backing Diameter d_a Shaft	Backing Diameter D_a Housing	Load Ratings Static Load Rating C_0	Load Ratings Dynamic Load Rating C	Equivalent Radial load Factors[1] Dynamic e	Dynamic $\frac{F_a}{F_r} \le e$ X = 1 Y	Dynamic $\frac{F_a}{F_r} > e$ X = .67 Y	Static In All Cases $X_0 = 1$ Y_0	Lubrication Life Adjustment Factor[4] C_g	Speed Ratings[3] Grease	Speed Ratings[3] Oil	Weight
	mm in.	mm in.	mm in.	mm in.	mm in.	mm in.	kN lbs.	kN lbs.						RPM	RPM	kg lbs.
240/500YMB	500 19.6850	720 28.3465	218.0 8.5827	5.0 0.20	547 21.5	672 26.5	11300 2540000	5040 1130000	0.27	2.51	3.74	2.45	0.1263	330	370	289 635
231/500YMB	500 19.6850	830 32.6772	264.0 10.3937	6.0 0.24	573 22.5	753 29.6	14100 3170000	7180 1610000	0.30	2.22	3.30	2.17	0.1307	320	350	572 1260
241/500YMB	500 19.6850	830 32.6772	325.0 12.7953	6.0 0.24	563 22.2	755 29.7	17700 3990000	8720 1960000	0.37	1.81	2.69	1.77	0.1300	200	210	704 1550
232/500YMB	500 19.6850	920 36.2205	336.0 13.2283	6.0 0.24	585 23.0	823 32.4	18100 4070000	9910 2230000	0.36	1.90	2.83	1.86	0.1340	240	260	988 2170
239/530YMB	530 20.8661	710 27.9528	136.0 5.3543	4.0 0.16	575 22.6	672 26.4	6950 1560000	3030 682000	0.16	4.11	6.12	4.02	0.1298	430	500	149 329
230/530YMB	530 20.8661	780 30.7087	185.0 7.2835	5.0 0.20	588 23.2	725 28.5	9840 2210000	4740 1070000	0.21	3.14	4.68	3.07	0.1319	420	480	299 657
240/530YMB	530 20.8661	780 30.7087	250.0 9.8425	5.0 0.20	583 23.0	725 28.5	13900 3110000	6170 1390000	0.28	2.37	3.53	2.32	0.1318	300	330	403 888
231/530YMB	530 20.8661	870 34.2520	272.0 10.7087	6.0 0.24	603 23.7	793 31.2	15300 3440000	7770 1750000	0.30	2.27	3.38	2.22	0.1350	300	320	637 1400
241/530YMB	530 20.8661	870 34.2520	335.0 13.1890	6.0 0.24	596 23.5	792 31.2	19800 4440000	9430 2120000	0.37	1.84	2.74	1.80	0.1352	180	190	785 1730
232/530YMB	530 20.8661	980 38.5827	355.0 13.9764	7.0 0.28	621 24.4	878 34.6	20500 4610000	11200 2520000	0.35	1.91	2.85	1.87	0.1395	220	240	1190 2620
239/560YMB	560 22.0472	750 29.5276	140.0 5.5118	4.0 0.16	607 23.9	710 28.0	7370 1660000	3240 729000	0.16	4.21	6.27	4.12	0.1339	400	470	172 378
230/560YMB	560 22.0472	820 32.2835	195.0 7.6772	5.0 0.20	620 24.4	764 30.1	10900 2460000	5230 1180000	0.22	3.14	4.67	3.07	0.1364	390	450	344 759
240/560YMB	560 22.0472	820 32.2835	258.0 10.1575	5.0 0.20	617 24.3	761 30.0	15000 3360000	6500 1460000	0.28	2.42	3.60	2.37	0.1365	280	310	456 1000
231/560YMB	560 22.0472	920 36.2205	280.0 11.0236	6.0 0.24	638 25.1	838 33.0	16600 3730000	8410 1890000	0.29	2.33	3.47	2.28	0.1399	270	300	734 1620
241/560YMB	560 22.0472	920 36.2205	355.0 13.9764	6.0 0.24	629 24.8	839 33.0	22100 4960000	10600 2370000	0.36	1.87	2.78	1.83	0.1400	160	170	931 2050
232/560YMB	560 22.0472	1030 40.5512	365.0 14.3701	7.0 0.28	661 26.0	918 36.1	22600 5090000	11900 2690000	0.34	1.96	2.91	1.91	0.1449	200	220	1340 2960
239/600YMB	600 23.6220	800 31.4961	150.0 5.9055	4.0 0.16	650 25.6	757 29.8	8690 1950000	3680 827000	0.16	4.20	6.25	4.11	0.1404	370	430	207 456
230/600YMB	600 23.6220	870 34.2520	200.0 7.8740	5.0 0.20	664 26.1	811 31.9	11900 2670000	5530 1240000	0.21	3.27	4.87	3.20	0.1413	360	410	391 861
240/600YMB	600 23.6220	870 34.2520	272.0 10.7087	5.0 0.20	658 25.9	811 31.9	17000 3820000	7320 1650000	0.28	2.44	3.64	2.39	0.1421	260	280	531 1170
231/600YMB	600 23.6220	980 38.5827	300.0 11.8110	6.0 0.24	681 26.8	895 35.2	19100 4290000	9560 2150000	0.29	2.32	3.46	2.27	0.1458	250	270	887 1950
239/630YMB	630 24.8031	850 33.4646	165.0 6.4961	5.0 0.20	684 26.9	804 31.6	10200 2290000	4390 986000	0.17	4.02	5.99	3.93	0.1451	340	400	264 583

Continued on next page.

SPHERICAL ROLLER BEARINGS - *continued*

- Life calculations, shaft and housing fits, internal clearances, tolerances and other technical data for these bearings are found in the engineering section of this catalog.
- Bearings are available with a tapered bore for adapter type mounting. To order, add the suffix "K" to bearing number (e.g., 23120K).
- Consult your Timken representative for up-to-date information about the availability of the bearings you have selected.

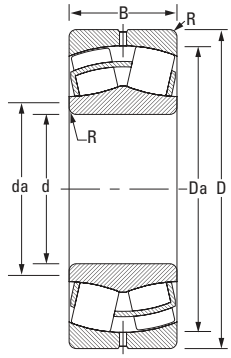

CJ

Bearing Number	d Bore	D O.D.	B Width	R Fillet[2] (max.)	Backing Diameter d_a Shaft	Backing Diameter D_a Housing	Load Ratings Static Load Rating C_0	Load Ratings Dynamic Load Rating C	Equivalent Radial Load Factors[1] Dynamic e	Dynamic $\frac{F_a}{F_r} \le e$ X = 1 Y	Dynamic $\frac{F_a}{F_r} > e$ X = .67 Y	Static In All Cases $X_0 = 1$ Y_0	Lubrication Life Adjustment Factor[4] C_g	Speed Ratings[3] Grease	Speed Ratings[3] Oil	Weight
	mm in.	mm in.	mm in.	mm in.	mm in.	mm in.	kN lbs.	kN lbs.						RPM	RPM	kg lbs.
230/630YMB	630 24.8031	920 36.2205	212.0 8.3465	6.0 0.24	696 27.4	858 33.8	13600 3050000	6370 1430000	0.21	3.18	4.74	3.11	0.1466	330	380	469 1030
240/630YMB	630 24.8031	920 36.2205	290.0 11.4173	6.0 0.24	691 27.2	856 33.7	18900 4240000	8180 1840000	0.28	2.41	3.59	2.36	0.1465	240	260	642 1410
231/630YMB	630 24.8031	1030 40.5512	315.0 12.4016	6.0 0.24	716 28.2	940 37.0	21500 4820000	10600 2390000	0.29	2.30	3.42	2.25	0.1505	230	250	1030 2270
241/630YMB	630 24.8031	1030 40.5512	400.0 15.7480	6.0 0.24	707 27.8	939 37.0	27900 6270000	13000 2920000	0.37	1.84	2.74	1.80	0.1504	140	140	1310 2880
239/670YMB	670 26.3780	900 35.4331	170.0 6.6929	5.0 0.20	727 28.6	851 33.5	11200 2510000	4720 1060000	0.16	4.15	6.18	4.06	0.1509	320	370	302 666
230/670YMB	670 26.3780	980 38.5827	230.0 9.0551	6.0 0.24	744 29.3	911 35.9	16000 3590000	7230 1630000	0.22	3.12	4.65	3.05	0.1531	310	350	579 1280
240/670YMB	670 26.3780	980 38.5827	308.0 12.1260	6.0 0.24	738 29.0	910 35.8	22100 4960000	9280 2090000	0.28	2.39	3.55	2.33	0.1530	220	240	775 1710
231/670YMB	670 26.3780	1090 42.9134	336.0 13.2283	6.0 0.24	760 29.9	995 39.2	23700 5340000	11600 2610000	0.29	2.31	3.44	2.26	0.1560	210	230	1220 2700
241/670YMD	670 26.3780	1090 42.9134	412.0 16.2205	6.0 0.24	751 29.6	996 39.2	30400 6830000	14100 3180000	0.36	1.90	2.82	1.85	0.1560	130	130	1500 3300
232/670YMD	670 26.3780	1220 48.0315	438.0 17.2441	9.0 0.35	779 30.7	1097 43.2	32100 7220000	16900 3800000	0.35	1.95	2.91	1.91	0.1608	160	170	2240 4940
239/710YMB	710 27.9528	950 37.4016	180.0 7.0866	5.0 0.20	771 30.4	898 35.3	12500 2820000	5150 1160000	0.16	4.13	6.15	4.04	0.1565	300	340	353 778
230/710YMB	710 27.9528	1030 40.5512	236.0 9.2913	6.0 0.24	785 30.9	960 37.8	16900 3800000	7680 1730000	0.21	3.26	4.86	3.19	0.1583	290	330	647 1430
240/710YMD	710 27.9528	1030 40.5512	315.0 12.4016	6.0 0.24	779 30.7	960 37.8	23400 5260000	9880 2220000	0.27	2.49	3.71	2.44	0.1582	200	220	863 1900
231/710YMB	710 27.9528	1150 45.2756	345.0 13.5827	7.0 0.28	809 31.8	1048 41.3	26200 5880000	12500 2800000	0.28	2.38	3.54	2.32	0.1622	200	210	1390 3060
241/710YMD	710 27.9528	1150 45.2756	438.0 17.2441	7.0 0.28	795 31.3	1050 41.4	34300 7720000	15700 3520000	0.36	1.87	2.78	1.83	0.1613	120	120	1760 3890
239/750YMB	750 29.5276	1000 39.3701	185.0 7.2835	5.0 0.20	813 32.0	946 37.3	13500 3040000	5550 1250000	0.16	4.23	6.30	4.14	0.1619	280	320	398 878
230/750YMB	750 29.5276	1090 42.9134	250.0 9.8425	6.0 0.24	830 32.7	1015 40.0	19000 4270000	8550 1920000	0.21	3.26	4.85	3.18	0.1641	270	300	770 1700
240/750YMD	750 29.5276	1090 42.9134	335.0 13.1890	6.0 0.24	824 32.4	1014 39.9	26400 5940000	11000 2480000	0.27	2.48	3.69	2.42	0.1640	190	200	1030 2270
241/750YMD	750 29.5276	1220 48.0315	475.0 18.7008	7.0 0.28	840 33.1	1114 43.9	39200 8800000	17800 4000000	0.36	1.86	2.77	1.82	0.1676	110	110	2170 4770
239/800YMB	800 31.4961	1060 41.7323	195.0 7.6772	5.0 0.20	868 34.2	1007 39.6	13800 3100000	5700 1280000	0.16	4.20	6.25	4.10	0.1685	270	310	465 1020
230/800YMB	800 31.4961	1150 45.2756	258.0 10.1575	6.0 0.24	888 35.0	1074 42.3	20300 4570000	8940 2010000	0.19	3.50	5.22	3.43	0.1696	250	280	868 1910

(1) These factors apply for both inch and metric calculations. See engineering section for instructions on use.
(2) Maximum shaft or housing fillet radius that bearing corners will clear.
* Available in standard shaker screen bearing design configuration (example: 223xxYMW33W800C4).
(3) See thermal speed ratings in the engineering section.
(4) Geometry constant for Lubrication Life Adjustment Factor a_{3l}. See "Bearing Load Ratings and Life Calculations."

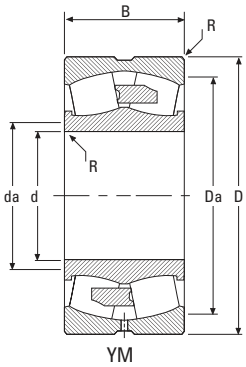

Bearing Number	d Bore	D O.D.	B Width	R Fillet[2] (max.)	Backing Diameter d_a Shaft	Backing Diameter D_a Housing	Load Ratings Static Load Rating C_0	Load Ratings Dynamic Load Rating C	Equivalent Radial load Factors[1] Dynamic e	Dynamic $\frac{F_a}{F_r} \le e$ X = 1 Y	Dynamic $\frac{F_a}{F_r} > e$ X = .67 Y	Static In All Cases $X_0 = 1$ Y_0	Lubrication Life Adjustment Factor[4] C_g	Speed Ratings[3] Grease	Speed Ratings[3] Oil	Weight
	mm in.	mm in.	mm in.	mm in.	mm in.	mm in.	kN lbs.	kN lbs.						RPM	RPM	kg lbs.
240/800YMD	800 31.4961	1150 45.2756	345.0 13.5827	6.0 0.24	877 34.5	1072 42.2	28900 6500000	11800 2650000	0.26	2.55	3.80	2.50	0.1790	170	190	1160 2560
231/800YMB	800 31.4961	1280 50.3937	365.0 14.3701	7.0 0.28	906 35.7	1171 46.1	31900 7170000	15000 3380000	0.28	2.45	3.65	2.40	0.1741	160	180	1800 3950
241/800YMD	800 31.4961	1280 50.3937	475.0 18.7008	7.0 0.28	896 35.3	1170 46.1	41900 9430000	18500 4170000	0.35	1.95	2.90	1.90	0.1740	97	100	2340 5150
232/800YMD	800 31.4961	1420 55.9055	488.0 19.2126	11.0 0.43	935 36.8	1272 50.1	44000 9900000	21500 4830000	0.33	2.04	3.03	1.99	0.1798	120	130	3310 7290
238/850YMB	850 33.4646	1030 40.5512	136.0 5.3543	4.0 0.16	900 35.4	993 39.1	10500 2350000	3650 822000	0.11	6.23	9.27	6.09	0.1718	130	150	233 513
239/850YMB	850 33.4646	1120 44.0945	200.0 7.8740	5.0 0.20	919 36.2	1050 41.4	14700 3300000	5720 1290000	0.15	4.54	6.76	4.44	0.1747	250	290	525 1150
230/850YMB	850 33.4646	1220 48.0315	272.0 10.7087	6.0 0.24	938 36.9	1138 44.8	23400 5250000	10200 2290000	0.20	3.37	5.02	3.30	0.1771	230	260	1030 2260
240/850YMD	850 33.4646	1220 48.0315	365.0 14.3701	6.0 0.24	931 36.7	1138 44.8	32600 7320000	13200 2960000	0.26	2.56	3.81	2.50	0.1770	160	170	1380 3030
231/850YMB	850 33.4646	1360 53.5433	400.0 15.7480	9.0 0.35	962 37.9	1245 49.0	36200 8140000	16900 3800000	0.28	2.44	3.63	2.39	0.1810	150	160	2220 4890
232/850YMD	850 33.4646	1500 59.0551	515.0 20.2756	11.0 0.43	990 39.0	1347 53.0	48400 10900000	23500 5280000	0.33	2.06	3.06	2.01	0.1864	110	120	3880 8540
239/900YMB	900 35.4331	1180 46.4567	206.0 8.1102	5.0 0.20	965 38.0	1112 43.8	18300 4110000	7120 1600000	0.14	4.69	6.98	4.58	0.1801	220	250	592 1300
230/900YMB	900 35.4331	1280 50.3937	280.0 11.0236	6.0 0.24	990 39.0	1198 47.2	25900 5820000	11100 2500000	0.20	3.41	5.08	3.33	0.1828	210	240	1140 2520
240/900YMD	900 35.4331	1280 50.3937	375.0 14.7638	6.0 0.24	983 38.7	1197 47.1	35600 7990000	14200 3200000	0.26	2.60	3.87	2.54	0.1827	150	160	1530 3370
231/900YMB	900 35.4331	1420 55.9055	412.0 16.2205	9.0 0.35	1018 40.1	1300 51.2	39400 8860000	17800 4010000	0.27	2.49	3.71	2.43	0.1871	140	150	2450 5390
241/900YMD	900 35.4331	1420 55.9055	515.0 20.2756	9.0 0.35	1008 39.7	1298 51.1	51000 11500000	21700 4870000	0.34	2.00	2.98	1.96	0.1869	82	85	3060 6740
232/900YMD	900 35.4331	1580 62.2047	515.0 20.2756	11.0 0.43	1056 41.6	1423 56.0	51400 11600000	24700 5560000	0.32	2.11	3.13	2.06	0.1926	100	110	4280 9420
239/950YMB	950 37.4016	1250 49.2126	224.0 8.8189	6.0 0.24	1025 40.3	1187 46.7	20700 4660000	8160 1830000	0.15	4.39	6.54	4.29	0.1874	210	240	729 1600
230/950YMB	950 37.4016	1360 53.5433	300.0 11.8110	6.0 0.24	1046 41.2	1273 50.1	27600 6190000	12100 2720000	0.19	3.49	5.19	3.41	0.1899	200	230	1400 3080
240/950YMD	950 37.4016	1360 53.5433	412.0 16.2205	6.0 0.24	1039 40.9	1269 50.0	41300 9290000	16400 3680000	0.27	2.53	3.77	2.47	0.1898	130	140	1920 4230
231/950YMB	950 37.4016	1500 59.0551	438.0 17.2441	9.0 0.35	1074 42.3	1373 54.1	44400 9980000	19900 4460000	0.27	2.47	3.68	2.42	0.1937	130	140	2910 6400
241/950YMD	950 37.4016	1500 59.0551	545.0 21.4567	9.0 0.35	1064 41.9	1371 54.0	57100 12800000	24100 5410000	0.34	2.00	2.97	1.95	0.1935	75	77	3620 7970

Continued on next page.

SPHERICAL ROLLER BEARINGS - *continued*

- Life calculations, shaft and housing fits, internal clearances, tolerances and other technical data for these bearings are found in the engineering section of this catalog.
- Bearings are available with a tapered bore for adapter type mounting. To order, add the suffix "K" to bearing number (e.g., 23120K).
- Consult your Timken representative for up-to-date information about the availability of the bearings you have selected.

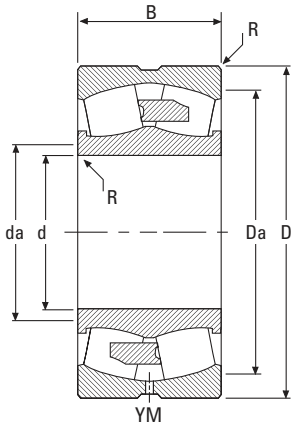

Bearing Number	d Bore	D O.D.	B Width	R Fillet[2] (max.)	Backing Diameter d_a Shaft	Backing Diameter D_a Housing	Load Ratings Static Load Rating C_0	Load Ratings Dynamic Load Rating C	Equivalent Radial load Factors[1] e	Dynamic $\frac{T}{R} \le e$ X = 1 Y	Dynamic $\frac{T}{R} > e$ X = .67 Y	Static In All Cases X_0 = 1 Y_0	Lubrication Life Adjustment Factor[4] C_g	Speed Ratings[3] Grease	Speed Ratings[3] Oil	Weight
	mm in.	mm in.	mm in.	mm in.	mm in.	mm in.	kN lbs.	kN lbs.						RPM	RPM	kg lbs.
239/1000YMB	1000 39.3701	1320 51.9685	236.0 9.2913	6.0 0.24	1080 42.5	1252 49.3	23100 5190000	9020 2030000	0.15	4.39	6.54	4.29	0.1939	190	220	864 1900
230/1000YMB	1000 39.3701	1420 55.9055	308.0 12.1260	6.0 0.24	1101 43.4	1327 52.2	32100 7220000	13400 3010000	0.20	3.44	5.12	3.36	0.1960	180	200	1540 3400
240/1000YMD	1000 39.3701	1420 55.9055	412.0 16.2205	6.0 0.24	1094 43.1	1329 52.3	41800 9390000	16600 3730000	0.25	2.69	4.01	2.63	0.1952	130	140	2070 4540
231/1000YMB	1000 39.3701	1580 62.2047	462.0 18.1890	9.0 0.35	1131 44.5	1446 56.9	49500 11100000	22000 4940000	0.27	2.47	3.68	2.42	0.2002	120	130	3410 7500
241/1000YMB	1000 39.3701	1580 62.2047	580.0 22.8346	9.0 0.35	1120 44.1	1444 56.9	64400 14500000	26800 6030000	0.34	1.98	2.95	1.93	0.2000	69	71	4280 9420
239/1060YMB	1060 41.7323	1400 55.1181	250.0 9.8425	6.0 0.24	1145 45.1	1328 52.3	26500 5950000	10200 2300000	0.16	4.25	6.32	4.15	0.2004	180	200	1030 2270
230/1060YMB	1060 41.7323	1500 59.0551	325.0 12.7953	7.0 0.28	1165 45.9	1404 55.3	35800 8050000	14800 3330000	0.20	3.44	5.12	3.36	0.2031	170	190	1810 3970
240/1060YMD	1060 41.7323	1500 59.0551	438.0 17.2441	7.0 0.28	1157 45.6	1403 55.2	49500 11100000	19000 4280000	0.26	2.61	3.88	2.55	0.2030	110	120	2430 5350
231/1060YMB	1060 41.7323	1660 65.3543	475.0 18.7008	11.0 0.43	1194 47.0	1524 60.0	53500 12000000	23700 5330000	0.27	2.53	3.77	2.48	0.2070	110	120	3820 8410
239/1120YMB	1120 44.0945	1460 57.4803	250.0 9.8425	6.0 0.24	1205 47.4	1389 54.7	27100 6090000	10400 2330000	0.15	4.62	6.87	4.51	0.2077	170	190	1080 2380
230/1120YMB	1120 44.0945	1580 62.2047	345.0 13.5827	7.0 0.28	1229 48.4	1480 58.3	40200 9040000	16500 3710000	0.20	3.42	5.09	3.34	0.2101	160	170	2110 4650
240/1120YMD	1120 44.0945	1580 62.2047	462.0 18.1890	7.0 0.28	1220 48.1	1480 58.3	55600 12500000	21200 4760000	0.26	2.62	3.90	2.56	0.2100	110	110	2830 6230
231/1120YMB	1120 44.0945	1750 68.8976	475.0 18.7008	11.0 0.43	1262 49.7	1609 63.3	56100 12600000	25000 5620000	0.25	2.67	3.98	2.62	0.2142	110	110	4240 9320
239/1180YMB	1180 46.4567	1540 60.6299	272.0 10.7087	6.0 0.24	1269 50.0	1465 57.7	31500 7090000	11900 2670000	0.15	4.48	6.67	4.38	0.2148	160	180	1310 2890
230/1180YMB	1180 46.4567	1660 65.3543	355.0 13.9764	7.0 0.28	1293 50.9	1557 61.3	43500 9780000	17800 4000000	0.19	3.50	5.21	3.42	0.2170	150	160	2390 5250
240/1180YMD	1180 46.4567	1660 65.3543	475.0 18.7008	7.0 0.28	1284 50.6	1557 61.3	59800 13400000	22700 5110000	0.25	2.67	3.98	2.61	0.2169	98	110	3190 7030
231/1180YMB	1180 46.4567	1850 72.8346	500.0 19.6850	11.0 0.43	1332 52.5	1698 66.9	62400 14000000	27600 6200000	0.25	2.68	4.00	2.62	0.2217	97	100	5010 11000
239/1250YMB	1250 49.2126	1630 64.1732	280.0 11.0236	6.0 0.24	1345 52.9	1551 61.1	34200 7680000	12800 2890000	0.15	4.60	6.85	4.50	0.2227	140	160	1510 3330
230/1250YMB	1250 49.2126	1750 68.8976	375.0 14.7638	7.0 0.28	1370 54.0	1640 64.6	48800 11000000	19400 4350000	0.19	3.50	5.21	3.42	0.2250	140	150	2770 6100
240/1250YMD	1250 49.2126	1750 68.8976	500.0 19.6850	7.0 0.28	1362 53.6	1639 64.5	66700 15000000	24600 5530000	0.25	2.68	3.99	2.62	0.2249	90	96	3700 8140
231/1250YMB	1250 49.2126	1950 76.7717	530.0 20.8661	11.0 0.43	1407 55.4	1794 70.6	70000 15700000	30700 6900000	0.25	2.67	3.98	2.62	0.2296	89	95	5860 12900

(1) These factors apply for both inch and metric calculations. See engineering section for instructions on use.
(2) Maximum shaft or housing fillet radius that bearing corners will clear.
* Available in standard shaker screen bearing design configuration (example: 223xxYMW33W800C4).
(3) See thermal speed ratings in the engineering section.
(4) Geometry constant for Lubrication Life Adjustment Factor a_{3l}. See "Bearing Load Ratings and Life Calculations."

INCH SHAFT ADAPTER ACCESSORIES FOR TAPERED BORE BEARINGS

SNW/SNP – PULL TYPE SLEEVE, LOCKNUT, LOCKWASHER/LOCKPLATE ASSEMBLIES

- The table below shows dimensions for adapter assemblies and components used in the mounting of tapered bore bearings on shafts.
- SNW assembly consists of a sleeve, Locknut and Lockwasher.
- SNP assembly consists of a sleeve, Locknut and Lockplate.

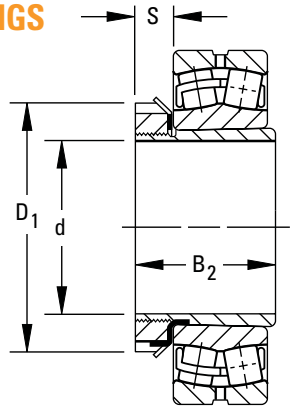

B

Bearing Number	Accessory Numbers				Shaft Dimensions		Adapter Dimensions Inches			SNW/SNP Assembly Weight
	Assembly	Sleeve	Locknut	Lockwasher Lockplate	Diameter d	Tolerance +.000 To	B_2	S	D_1	
					in.	in.	in.	in.	in.	lbs.
FOR SERIES 222K										
22209K	SNW-09	S-09	N-09	W-09	1 7/16	-.003	1 37/64	1/2	2 17/32	0.6
22210K	SNW-10	S-10	N-10	W-10	1 11/16	-.003	1 49/64	9/16	2 11/16	0.7
22211K	SNW-11	S-11	N-11	W-11	1 15/16	-.003	1 27/32	9/16	2 31/32	0.8
22212K	SNW-12	S-12	N-12	W-12	2 1/16	-.004	1 63/64	19/32	3 5/32	1.1
22213K	SNW-13	S-13	N-13	W-13	2 3/16	-.004	2 3/32	5/8	3 3/8	1.4
22214K	SNW-14	S-14	N-14	W-14	2 5/16	-.004	2 11/64	5/8	3 5/8	1.8
22215K	SNW-15	S-15	AN-15	W-15	2 7/16	-.004	2 19/64	43/64	3 7/8	2
22216K	SNW-16	S-16	AN-16	W-16	2 11/16	-.004	2 3/8	43/64	4 5/32	2.4
22217K	SNW-17	S-17	AN-17	W-17	2 15/16	-.004	2 31/64	45/64	4 13/32	3
22218K	SNW-18	S-18	AN-18	W-18	3 3/16	-.004	2 41/64	25/32	4 21/32	3
22219K	SNW-19	S-19	AN-19	W-19	3 5/16	-.004	2 49/64	13/16	4 15/16	3.3
22220K	SNW-20	S-20	AN-20	W-20	3 7/16	-.004	2 7/8	27/32	5 3/16	4.4
22222K	SNW-22	S-22	AN-22	W-22	3 15/16	-.004	3 13/64	29/32	5 23/32	5
22224K	SNW-24	S-24	AN-24	W-24	4 3/16	-.005	3 15/32	15/16	6 1/8	6.7
22226K	SNW-26	S-26	AN-26	W-26	4 7/16	-.005	3 49/64	1	6 3/4	8.6
22228K	SNW-28	S-28	AN-28	W-28	4 15/16	-.005	3 63/64	1 1/16	7 3/32	10.3
22230K	SNW-30	S-30	AN-30	W-30	5 3/16	-.005	4 15/64	1 1/8	7 11/16	13.5
22232K	SNW-32	S-32	AN-32	W-32	5 7/16	-.005	4 37/64	1 3/16	8 1/16	15.6
22234K	SNW-34	S-34	AN-34	W-34	5 15/16	-.005	4 27/32	1 7/32	8 21/32	19.4
22236K	SNW-36	S-36	AN-36	W-36	6 7/16	-.005	5 1/32	1 1/4	9 1/16	20.5
22238K	SNW-38	S-38	AN-38	W-38	6 15/16	-.005	5 17/64	1 9/32	9 15/32	23.4
22240K	SNW-40	S-40	AN-40	W-40	7 3/16	-.005	5 31/64	1 11/32	9 27/32	30.5
22244K	SNW-44	S-44	AN-44	W-44	7 15/16	-.005	5 29/32	1 3/8	11	33
FOR SERIES 230K										
23024K	SNW-3024	S-3024	N-024	W-024	4 3/16	-.005	2 61/64	13/16	5 11/16	6.1
23026K	SNW-3026	S-3026	N-026	W-026	4 7/16	-.005	3 15/64	7/8	6 1/8	7.5
23028K	SNW-3028	S-3028	N-028	W-028	4 15/16	-.005	3 11/32	15/16	6 1/2	8.4
23030K	SNW-3030	S-3030	N-030	W-030	5 3/16	-.005	3 31/64	31/32	7 1/8	9.8
23032K	SNW-3032	S-3032	N-032	W-032	5 7/16	-.005	3 23/32	1 1/32	7 1/2	11.8
23034K	SNW-3034	S-3034	N-034	W-034	5 15/16	-.005	4 1/64	1 1/16	7 7/8	13.3
23036K	SNW-3036	S-3036	N-036	W-036	6 7/16	-.005	4 11/32	1 3/32	8 1/4	15.2
23038K	SNW-3038	S-3038	N-038	W-038	6 15/16	-.005	4 13/32	1 1/8	8 11/16	16.7
23040K	SNW-3040	S-3040	N-040	W-040	7 3/16	-.005	4 3/4	1 3/16	9 7/16	19.7
23044K	SNW-3044	S-3044	N-044	W-044	7 15/16	-.005	5 1/8	1 1/4	10 1/4	24.4
23048K	SNP-3048	S-3048	N-048	P-048	8 15/16	-.006	5 7/16	1 11/32	11 7/16	32.2
23052K	SNP-3052	S-3052	N-052	P-052	9 7/16	-.006	6 1/64	1 13/32	12 3/16	41.1
23056K	SNP-3056	S-3056	N-056	P-056	10 7/16	-.007	6 3/16	1 1/2	13	45.4
23060K	SNP-3060	S-3060	N-060	P-060	10 15/16	-.007	6 47/64	1 9/16	14 3/16	58.9
23064K	SNP-3064	S-3064	N-064	P-064	11 15/16	-.007	6 61/64	1 21/32	15	65.7
23068K	SNP-3068	S-3068	N-068	P-068	12 7/16	-.008	7 35/64	1 25/32	15 3/4	77.8
23072K	SNP-3072	S-3072	N-072	P-072	13 7/16	-.008	7 37/64	1 25/32	16 1/2	86.2
23076K	SNP-3076	S-3076	N-076	P-076	13 15/16	-.008	7 3/4	1 57/64	17 3/4	94.3
23080K	SNP-3080	S-3080	N-080	P-080	15	-.008	8 13/32	2 1/16	18 1/2	105

B

INCH SHAFT ADAPTER ACCESSORIES FOR TAPERED BORE BEARINGS

SNW/SNP – PULL TYPE SLEEVE, LOCKNUT, LOCKWASHER/LOCKPLATE ASSEMBLIES

- The table below shows dimensions for adapter assemblies and components used in the mounting of tapered bore bearings on shafts.
- SNW assembly consists of a sleeve, Locknut and Lockwasher.
- SNP assembly consists of a sleeve, Locknut and Lockplate.

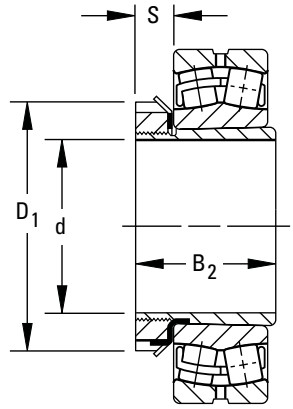

Tapered bore bearing plus SNW

Bearing Number		Accessory Numbers				Shaft Dimensions		Adapter Dimensions Inches			SNW/SNP Assembly Weight
		Assembly	Sleeve	Locknut	Lockwasher Lockplate	Diameter d	Tolerance +.000 To	B_2	S	D_1	
						in.	in.	in.	in.	in.	lbs.
FOR SERIES 223K and 232K											
22308K		SNW-108	S-108	N-08	W-08	1 5/16	-.003	2 1/64	1/2	2 1/4	0.8
22309K		SNW-109	S-109	N-09	W-09	1 7/16	-.003	2 9/64	1/2	2 17/32	0.8
22310K		SNW-110	S-110	N-10	W-10	1 11/16	-.003	2 25/64	9/16	2 11/16	0.9
22311K		SNW-111	S-111	N-11	W-11	1 15/16	-.003	2 33/64	9/16	2 31/32	0.9
22312K		SNW-112	S-112	N-12	W-12	2 1/16	-.004	2 21/32	19/32	3 5/32	1.2
22313K		SNW-113	S-113	N-13	W-13	2 3/16	-.004	2 49/64	5/8	3 3/8	1.7
22314K		SNW-114	S-114	N-14	W-14	2 5/16	-.004	2 61/64	5/8	3 5/8	2.3
22315K		SNW-115	S-115	AN-15	W-15	2 7/16	-.004	3 5/64	43/64	3 7/8	3
22316K		SNW-116	S-116	AN-16	W-16	2 11/16	-.004	3 13/64	43/64	4 5/32	3.2
22317K		SNW-117	S-117	AN-17	W-17	2 15/16	-.004	3 5/16	45/64	4 13/32	3.5
22318K		SNW-118	S-118	AN-18	W-18	3 3/16	-.004	3 35/64	25/32	4 21/32	4
22319K		SNW-119	S-119	AN-19	W-19	3 5/16	-.004	3 45/64	13/16	4 15/16	5
22320K	23220K	SNW-120	S-120	AN-20	W-20	3 7/16	-.004	3 31/32	27/32	5 3/16	6.2
22322K	23222K	SNW-122	S-122	AN-22	W-22	3 15/16	-.004	4 11/32	29/32	5 23/32	6.5
22324K	23224K	SNW-124	S-124	AN-24	W-24	4 3/16	-.005	4 41/64	15/16	6 1/8	8
22326K	23226K	SNW-126	S-126	AN-26	W-26	4 7/16	-.005	4 63/64	1	6 3/4	12.4
22328K	23228K	SNW-128	S-128	AN-28	W-28	4 15/16	-.005	5 21/64	1 1/16	7 3/32	13
22330K	23230K	SNW-130	S-130	AN-30	W-30	5 3/16	-.005	5 5/8	1 1/8	7 11/16	17.6
22332K	23232K	SNW-132	S-132	AN-32	W-32	5 7/16	-.005	5 59/64	1 3/16	8 1/16	18.5
22334K	23234K	SNW-134	S-134	AN-34	W-34	5 15/16	-.005	6 3/16	1 7/32	8 21/32	21
22336K	23236K	SNW-136	S-136	AN-36	W-36	6 7/16	-.005	6 29/64	1 1/4	9 1/16	22.5
22338K	23238K	SNW-138	S-138	AN-38	W-38	6 15/16	-.005	6 3/4	1 9/32	9 15/32	28
22340K	23240K	SNW-140	S-140	AN-40	W-40	7 3/16	-.005	7 3/32	1 11/32	9 27/32	36
22344K	23244K	SNW-144	S-144	AN-44	W-44	7 15/16	-.005	7 9/32	1 3/8	11	47
22348K	23248K	SNP-148	S-148	N-048	P-48	8 15/16	-.006	8 7/64	1 11/32	11 7/16	38.3
22352K	23252K	SNP-152	S-152	N-052	P-52	9 7/16	-.006	8 49/64	1 13/32	12 13/16	53.4
22356K	23256K	SNP-3256	S-3256	N-056	P-56	10 7/16	-.007	8 15/16	1 1/2	13	61.3
FOR SERIES 231K											
23122K		SNW-3122	S-22	N-022	W-022	3 15/16	-.004	3 13/64	25/32	5 5/32	4.2
23124K		SNW-3124	S-24	N-024	W-024	4 3/16	-.005	3 15/32	13/16	5 11/16	5.8
23126K		SNW-3126	S-26	N-026	W-026	4 7/16	-.005	3 49/64	7/8	6 1/8	8.3
23128K		SNW-3128	S-28	N-028	W-028	4 15/16	-.005	3 63/64	15/16	6 1/2	8.8
23130K		SNW-3130	S-30	N-030	W-030	5 3/16	-.005	4 15/64	31/32	7 1/8	13.7
23132K		SNW-3132	S-32	N-032	W-032	5 7/16	-.005	4 37/64	1 1/32	7 1/2	13.3
23134K		SNW-3134	S-34	N-034	W-034	5 15/16	-.005	4 27/32	1 1/16	7 7/8	16.1
23136K		SNW-3136	S-36	N-036	W-036	6 7/16	-.005	5 1/32	1 3/32	8 1/4	17.1
23138K		SNW-3138	S-38	N-038	W-038	6 15/16	-.005	5 17/64	1 1/8	8 11/16	19.7
23140K		SNW-3140	S-40	N-040	W-040	7 3/16	-.005	5 31/64	1 3/16	9 7/16	28.4
23144K		SNW-3144	S-44	N-044	W-044	7 15/16	-.005	5 29/32	1 1/4	10 1/4	28.1
23148K		SNP-3148	S-48	N-048	P-48	8 15/16	-.006	6 41/64	1 11/32	11 7/16	36
23152K		SNP-3152	S-52	N-052	P-052	9 7/16	-.006	7 19/32	1 13/32	12 3/16	39
23156K		SNP-3156	S-3156	N-056	P-56	10 7/16	-.007	7 49/64	1 1/2	13	60
23160K		SNP-3160	S-3160	N-060	P-060	10 15/16	-.007	8 3/8	1 9/16	14 3/16	65
23164K		SNP-3164	S-3164	N-064	P-064	11 15/16	-.007	9 7/64	1 21/32	15	70

INCH SHAFT ADAPTER ACCESSORIES FOR TAPERED BORE BEARINGS

PUSH TYPE REMOVABLE SLEEVE, LOCKNUT AND LOCKWASHER

- The table below shows dimensions for adapter assemblies and components used in the mounting of tapered bore bearings on shafts.

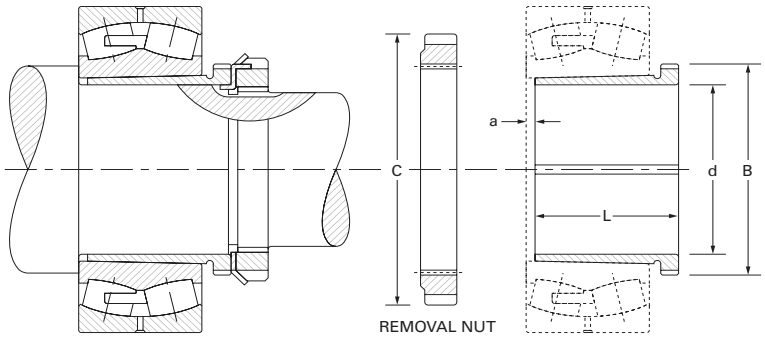

Tapered bore bearing mounted with push type removable sleeve.

Bearing Number	Accessory Numbers				Shaft Dimensions		Sleeve Dimensions				Sleeve Weight
	Sleeve	Locknut	Lockwasher Lockplate	Removal Nut	Diameter d	Tolerance +.000 To	B Pitch Dia.	L	a	C Removal Nut O.D.	
					mm in.	mm in.	mm in.	mm in.	mm in.	mm in.	kg. lbs.
SERIES 222K											
22216K	SK-8022	N-14	W-14	AN-18	70 2.7559	-.10 -.004	88.19 3.472	50 1.969	3.5 0.138	118.39 4.661	0.57 1.25
22217K	SK-8522	AN-15	W-15	AN-19	75 2.9528	-.10 -.004	93.35 3.675	52 2.047	3.5 0.138	125.55 4.943	0.65 1.44
22218K	SK-9022	AN-16	W-16	AN-20	80 3.1496	-.10 -.004	98.12 3.863	53 2.087	3.5 0.138	131.90 5.193	0.69 1.53
22219K	SK-9522	AN-17	W-17	AN-21	85 3.3465	-.10 -.004	103.28 4.066	57 2.244	4.0 0.157	138.25 5.443	0.82 1.81
22220K	SK-10022	AN-18	W-18	AN-22	90 3.5433	-.10 -.004	109.12 4.269	59 2.323	4.0 0.157	145.39 5.724	0.91 2.00
22222K	SK-11022	AN-20	W-20	ARN-22	100 3.9370	-.10 -.004	119.94 4.722	65 2.559	4.0 0.157	158.75 6.250	1.12 2.47
22224K	SK-12022	AN-22	W-22	ARN-24	110 4.3307	-.13 -.005	130.28 5.129	72 2.835	4.0 0.157	174.63 6.875	1.42 3.13
22226K	SK-13022	AN-22	W-22	ARN-26	115 4.5276	-.13 -.005	141.38 5.566	78 3.071	4.0 0.157	184.15 7.250	2.27 5.00
22228K	SK-14022	AN-24	W-24	RN-28	125 4.9213	-.13 -.005	152.73 6.013	82 3.228	5.0 0.197	200.03 7.875	2.67 5.88
22230K	SK-15022	AN-26	W-26	RN-30	135 5.3150	-.13 -.005	163.04 6.419	88 3.465	5.0 0.197	209.55 8.250	3.09 6.81
22232K	SK-16022	AN-28	W-28	RN-32	140 5.5118	-.13 -.005	173.76 6.841	96 3.780	5.0 0.197	225.43 8.875	4.51 9.94
22234K	SK-17022	AN-30	W-30	RN-34	150 5.9055	-.13 -.005	184.07 7.247	104 4.095	5.0 0.197	234.95 9.250	5.22 11.50
22236K	SK-18022	AN-32	W-32	RN-36	160 6.2992	-.13 -.005	194.79 7.669	104 4.095	5.0 0.197	247.65 9.750	5.67 12.50
22238K	SK-19022	AN-34	W-34	RN-38	170 6.6929	-.13 -.005	205.92 8.107	112 4.409	5.0 0.197	269.88 10.625	6.58 14.50
22240K	SK-20022	AN-36	W-36	N-44	180 7.0866	-.13 -.005	217.02 8.544	118 4.646	5.0 0.197	279.53 11.005	7.43 16.37
22244K	SK-22022	AN-40	W-40	N-048	200 7.8740	-.13 -.005	236.98 9.330	130 5.118	6.0 0.236	290.65 11.443	8.89 19.60
22248K	SK-24022	N-44	W-44	N-052	220 8.6614	-.15 -.006	256.03 10.080	144 5.669	6.0 0.236	309.70 12.193	11.02 24.30
22252K	SK-26022	N-048	P-48	N-056	240 9.4488	-.15 -.006	276.66 10.892	155 6.102	6.0 0.236	330.33 13.005	14.02 30.90
22256K	SK-28022	N-052	P-52	RN-56	260 10.2362	-.15 -.006	301.27 11.861	155 6.102	8.0 0.315	425.45 16.75	15.01 33.10
22260K	SK-30022	N-056	P-56	RN-60	280 11.0236	-.15 -.006	325.88 12.830	170 6.693	8.0 0.315	416.10 16.382	17.78 39.20
22264K	SK-32022	N-060	P-60	RN-64	300 11.8110	-.15 -.006	345.72 13.611	180 7.087	10.0 0.394	431.80 17.000	21.00 46.30

B

INCH SHAFT ADAPTER ACCESSORIES FOR TAPERED BORE BEARINGS

PUSH TYPE REMOVABLE SLEEVE, LOCKNUT AND LOCKWASHER

- The table below shows dimensions for adapter assemblies and components used in the mounting of tapered bore bearings on shafts.

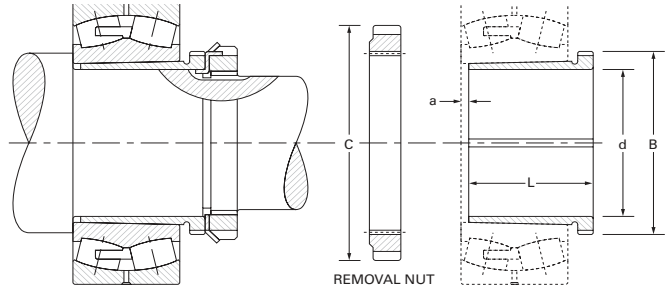

Tapered bore bearing mounted with push type removable sleeve.

Bearing Number	Accessory Numbers				Dimensions Shaft		Sleeve Dimensions				Sleeve Weight
	Sleeve	Locknut	Lockwasher Lockplate	Removal Nut	Diameter d	Tolerance +.000 To	B Pitch Dia.	L	a	C Removal Nut O.D.	
					mm in.	mm in.	mm in.	mm in.	mm in.	mm in.	kg. lbs.
SERIES 223K											
22308K	SK-4023	N-07	W-07	N-09	35	-.08	43.94	40	3.0	64.41	0.11
					1.3780	-.003	1.730	1.575	0.118	2.536	0.25
22309K	SK-4523	N-08	W-08	N-10	40	-.08	49.02	44	3.0	68.40	0.14
					1.5748	-.003	1.930	1.732	0.118	2.693	0.31
22310K	SK-5023	N-09	W-09	RN-10	45	-.08	55.04	50	3.0	76.20	0.21
					1.7717	-.003	2.167	1.969	0.118	3.000	0.47
22311K	SK-5523	N-10	W-10	RN-11	50	-.08	60.20	54	3.0	81.76	0.25
					1.9685	-.003	2.370	2.126	0.118	3.219	0.56
22312K	SK-6023	N-11	W-11	RN-12	55	-.10	65.76	57	3.5	87.33	0.31
					2.1654	-.004	2.589	2.244	0.138	3.438	0.69
22313K	SK-6523	N-12	W-12	AN-15	60	-.10	73.10	61	3.5	98.55	0.38
					2.3622	-.004	2.878	2.402	0.138	3.880	0.84
22314K	SK-7023	N-12	W-12	AN-16	60	-.10	78.28	65	3.5	105.69	0.69
					2.3622	-.004	3.082	2.559	0.138	4.161	1.53
22315K	SK-7523	N-13	W-13	AN-17	65	-.10	83.44	69	3.5	112.04	0.81
					2.5591	-.004	3.285	2.717	0.138	4.411	1.78
22316K	SK-8023	N-14	W-14	AN-18	70	-.10	88.19	72	3.5	118.39	0.91
					2.7559	-.004	3.472	2.835	0.138	4.661	2.00
22317K	SK-8523	AN-15	W-15	AN-19	75	-.10	93.35	75	3.5	125.55	1.02
					2.9528	-.004	3.675	2.953	0.138	4.943	2.25
22318K	SK-9023	AN-16	W-16	AN-20	80	-.10	98.12	80	3.5	131.90	1.16
					3.1496	-.004	3.863	3.150	0.138	5.193	2.56
22319K	SK-9523	AN-17	W-17	AN-21	85	-.10	103.28	85	4.0	138.25	1.33
					3.3465	-.004	4.066	3.346	0.157	5.443	2.94
22320K	SK-10023	AN-18	W-18	AN-22	90	-.10	109.12	90	4.0	145.39	1.53
					3.5433	-.004	4.269	3.543	0.157	5.724	3.38
22322K	SK-11023	AN-20	W-20	ARN-22	100	-.10	119.94	98	4.0	158.75	1.93
					3.9370	-.004	4.722	3.858	0.157	6.250	4.25
22324K	SK-12023	AN-22	W-22	ARN-24	110	-.13	130.28	105	4.0	174.63	2.27
					4.3307	-.005	5.129	4.134	0.157	6.875	5.00
22326K	SK-13023	AN-22	W-22	ARN-26	115	-.13	141.38	115	4.0	184.15	3.63
					4.5276	-.005	5.566	4.528	0.157	7.250	8.00
22328K	SK-14023	AN-24	W-24	RN-28	125	-.13	152.73	125	5.0	200.03	4.31
					4.9213	-.005	6.013	4.921	0.197	7.875	9.50
22330K	SK-15023	AN-26	W-26	RN-30	135	-.13	163.04	135	5.0	209.55	5.18
					5.3150	-.005	6.419	5.315	0.197	8.250	11.43
22332K	SK-16023	AN-28	W-28	RN-32	140	-.13	173.76	140	6.0	225.43	7.03
					5.5118	-.005	6.841	5.512	0.236	8.875	15.50
22334K	SK-17023	AN-30	W-30	RN-34	150	-.13	184.07	146	6.0	234.95	7.82
					5.9055	-.005	7.247	5.748	0.236	9.250	17.25
22336K	SK-18023	AN-32	W-32	RN-36	160	-.13	194.79	154	6.0	247.65	9.19
					6.2992	-.005	7.669	6.063	0.236	9.750	20.25
22338K	SK-19023	AN-34	W-34	RN-38	170	-.13	205.92	160	7.0	269.88	10.03
					6.6929	-.005	8.107	6.299	0.276	10.625	22.12
22340K	SK-20023	AN-36	W-36	N-44	180	-.13	217.02	170	7.0	279.53	11.45
					7.0866	-.005	8.544	6.693	0.276	11.005	25.25
22344K	SK-22023	AN-40	W-40	N-048	200	-.13	236.98	181	8.0	290.65	13.38
					7.8740	-.005	9.330	7.126	0.315	11.443	29.50
22348K	SK-24023	N-44	W-44	N-052	220	-.15	256.03	189	8.0	309.70	15.51
					8.6614	-.006	10.080	7.441	0.315	12.193	34.20
22352K	SK-26023	N-048	P-48	N-056	240	-.15	276.66	200	8.0	330.33	18.26
					9.4488	-.006	10.892	7.874	0.315	13.005	40.25
22356K	SK-28023	N-052	P-52	RN-56	260	-.15	301.27	210	10.0	425.45	22.00
					10.2362	-.006	11.861	8.268	0.394	16.75	48.50

INCH SHAFT ADAPTER ACCESSORIES FOR CYLINDRICAL BORE BEARINGS

LOCKNUT AND LOCKWASHER

- The table below shows dimensions for Locknuts and Lockwashers used in the mounting of cylindrical bore bearings on shafts.
- Other dimensions and tolerances related to shaft configurations also are shown.
- Dimensions are presented according to bearing bore size and are applicable to bearings in the various series (e.g., 222, 223, etc.).

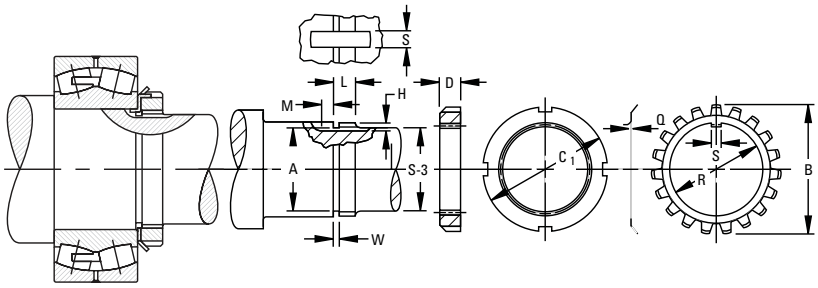

Bearing Bore	Lock-nut	Lock-washer	Thds. Per Inch	Threads: Major Dia. Max.	Threads: Major Dia. Min.	Threads: Pitch Dia. Max.	Threads: Pitch Dia. Min.	Threads: Minor Dia. A	Threads: Relief Dia.	Shaft[2]: S-3[1]	Shaft[2]: W -0 +1/64	Shaft[2]: L -0 +1/64	Shaft[2]: H -0 +1/64	Shaft[2]: S -0 +1/64	Shaft[2]: M -0 +1/64	Locknut: C_1	Locknut: D	Lockwasher: Q	Lockwasher: R	Lockwasher: B	Lockwasher: S
mm				mm in.	mm in.	mm in.	mm in.	mm in.	mm in.	mm in.	mm in.	mm in.	mm in.	mm in.	mm in.	mm in.	mm in.	mm in.	mm in.	mm in.	mm in.
35	N 07	W 07	18	34.95	34.74	34.03	33.93	33.22	32.82	31.75	2.4	12.7	2.4	4.8	3.2	52.39	11.4	1.3	36.0	57.2	4.5
				1.376	1.3678	1.3399	1.3359	1.3078	1.2922	1 1/4	3/32	1/2	3/32	3/16	1/8	2 1/16	0.448	0.050	1.416	2 1/4	0.176
40	N 08	W 08	18	39.7	39.49	38.78	38.67	37.97	37.57	36.51	3.2	13.5	2.4	7.9	3.2	57.15	11.4	1.5	40.7	62.7	7.4
				1.563	1.5548	1.5269	1.5224	1.4948	1.4792	1 7/16	1/8	17/32	3/32	5/16	1/8	2 1/4	0.448	0.058	1.603	2 15/32	0.290
45	N 09	W 09	18	44.88	44.67	43.96	43.85	43.15	42.75	42.86	3.2	13.5	2.4	7.9	4.0	64.3	11.4	1.5	46.2	69.5	7.4
				1.767	1.7588	1.7309	1.7264	1.6988	1.6832	1 11/16	1/8	17/32	3/32	5/16	5/32	2 17/32	0.448	0.058	1.817	2 47/64	0.290
50	N 10	W 10	18	49.96	49.75	49.05	48.93	48.23	47.83	47.63	3.2	15.1	2.4	7.9	4.0	68.3	13.0	1.5	51.2	74.2	7.4
				1.967	1.9588	1.9309	1.9264	1.8988	1.8832	1 7/8	1/8	19/32	3/32	5/16	5/32	2 11/16	0.510	0.058	2.017	2 59/64	0.290
55	N 11	W 11	18	54.79	54.58	53.87	53.74	53.06	52.66	52.39	3.2	15.1	3.2	7.9	4.0	75.4	13.0	1.6	56.1	79.0	7.4
				2.157	2.1488	2.1209	2.1158	2.0888	2.0732	2 1/16	1/8	19/32	1/8	5/16	5/32	2 31/32	0.510	0.063	2.207	3 7/64	0.290
60	N 12	W 12	18	59.94	59.74	59.03	58.90	58.21	57.82	57.15	3.2	15.9	3.2	7.9	4.0	80.2	13.7	1.6	61.6	85.0	7.4
				2.360	2.3518	2.3239	2.3188	2.2918	2.2762	2 1/4	1/8	5/8	1/8	5/16	5/32	3 5/32	0.541	0.063	2.425	3 11/32	0.290
65	N 13	W 13	18	64.72	64.51	63.80	63.67	62.99	62.59	61.91	3.2	16.7	3.2	7.9	4.0	85.7	14.6	1.6	66.4	90.9	7.4
				2.548	2.5398	2.5119	2.5068	2.4798	2.4642	2 7/16	1/8	21/32	1/8	5/16	5/32	3 3/8	0.573	0.063	2.613	3 37/64	0.290
70	N 14	W 14	18	69.88	69.67	68.96	68.83	68.14	67.75	66.68	3.2	16.7	3.2	7.9	6.4	92.1	14.6	1.6	71.5	97.2	7.4
				2.751	2.7428	2.7149	2.7098	2.6828	2.6672	2 5/8	1/8	21/32	1/8	5/16	1/4	3 5/8	0.573	0.063	2.816	3 53/64	0.290
75	AN 15	W 15	12	74.50	74.21	73.12	72.99	71.90	71.11	71.44	4.0	17.5	3.2	7.9	6.4	98.4	15.3	1.6	76.3	104.4	7.4
				2.933	2.9218	2.8789	2.8735	2.8308	2.7995	2 13/16	5/32	11/16	1/8	5/16	1/4	3 7/8	0.604	0.072	3.003	4 7/64	0.290
80	AN 16	W 16	12	79.68	79.40	78.31	78.16	77.08	76.29	76.20	4.0	17.5	3.2	9.5	6.4	105.6	15.3	1.8	81.5	111.1	9.0
				3.137	3.1258	3.0829	3.0770	3.0348	3.0035	3	5/32	11/16	1/8	3/8	1/4	4 5/32	0.604	0.063	3.207	4 3/8	0.353
85	AN 17	W 17	12	84.84	84.55	83.46	83.31	82.24	81.45	80.96	4.0	16.7	3.2	9.5	6.4	111.9	16.1	1.8	87.0	117.5	9.0
				3.340	3.3288	3.2859	3.2800	3.2378	3.2065	3 3/16	5/32	21/32	1/8	3/8	1/4	4 13/32	0.635	0.072	3.425	4 5/8	0.353
90	AN 18	W 18	12	89.59	89.30	88.21	88.02	86.99	86.20	85.73	4.0	20.6	4.0	9.5	6.4	118.3	17.7	2.4	91.7	125.4	9.0
				3.527	3.5158	3.4729	3.4655	3.4248	3.3935	3 3/8	5/32	13/16	5/32	3/8	1/4	4 21/32	0.698	0.094	3.612	4 15/16	0.353
95	AN 19	W 19	12	94.74	94.46	93.37	93.18	92.15	91.35	90.49	4.0	21.4	4.0	9.5	6.4	125.4	18.5	2.4	97.3	132.6	9.0
				3.730	3.7188	3.6759	3.6685	3.6278	3.5965	3 9/16	5/32	27/32	5/32	3/8	1/4	4 15/16	0.729	0.094	3.830	5 7/32	0.353
100	AN 20	W 20	12	99.52	99.23	98.14	97.96	96.92	96.13	96.84	4.0	22.2	4.0	9.5	7.9	131.8	19.3	2.4	102.1	139.7	9.0
				3.918	3.9068	3.8639	3.8565	3.8158	3.7845	3 13/16	5/32	7/8	5/32	3/8	5/16	5 3/16	0.760	0.094	4.018	5 1/2	0.353
105	AN 21	W 21	12	104.70	104.41	103.32	103.11	102.10	101.31	100.01	4.0	22.2	4.0	9.5	7.9	138.1	19.3	2.4	107.2	144.9	9.0
				4.122	4.1108	4.0679	4.0596	4.0198	3.9885	3 15/16	5/32	7/8	5/32	3/8	5/16	5 7/16	0.760	0.094	4.222	5 45/64	0.353
110	AN 22	W 22	12	109.86	109.57	108.48	108.27	107.26	106.46	106.36	4.0	23.0	4.8	9.5	7.9	145.3	20.1	3.2	112.4	154.0	9.0
				4.325	4.3138	4.2709	4.2626	4.2228	4.1915	4 3/16	5/32	29/32	3/16	3/8	5/16	5 23/32	0.791	0.125	4.425	6 1/16	0.353
120	AN 24	W 24	12	119.79	119.50	118.41	118.20	117.19	116.40	115.89	4.0	23.8	4.8	9.5	7.9	155.6	20.9	3.2	122.7	164.3	9.0
				4.716	4.7048	4.6619	4.6536	4.6138	4.5825	4 9/16	5/32	15/16	3/16	3/8	5/16	6 1/8	0.823	0.125	4.831	6 15/32	0.353
130	AN 26	W 26	12	129.69	129.41	128.32	128.11	127.10	126.30	125.41	4.0	25.4	4.8	12.7	7.9	171.5	22.5	3.2	132.7	178.6	11.1
				5.106	5.0948	5.0519	5.0436	5.0038	4.9725	4 15/16	5/32	1	3/16	1/2	5/16	6 3/4	0.885	0.125	5.226	7 1/32	0.435
140	AN 28	W 28	12	139.62	139.34	138.25	138.04	137.03	136.23	134.94	4.0	27.0	4.8	15.9	7.9	180.2	24.1	3.2	142.7	188.9	15.0
				5.497	5.4858	5.4429	5.4346	5.3948	5.3635	5 5/16	5/32	1 1/16	3/16	5/8	5/16	7 3/32	0.948	0.125	5.617	7 7/16	0.590
150	AN 30	W 30	12	149.56	149.27	148.18	147.97	146.96	146.16	146.05	4.0	28.6	5.6	15.9	9.5	195.3	24.9	4.0	152.9	204.8	15.0
				5.888	5.8768	5.8339	5.8256	5.7858	5.7545	5 3/4	5/32	1 1/8	7/32	5/8	3/8	7 11/16	0.979	0.156	6.018	8 1/16	0.590
160	AN 32	W 32	8	159.61	159.23	157.55	157.32	155.72	154.92	153.99	6.4	30.2	6.0	15.9	9.5	204.8	26.4	4.0	163.2	214.3	15.0
				6.284	6.2688	6.2028	6.1937	6.1306	6.0993	6 1/16	1/4	1 3/16	15/64	5/8	3/8	8 1/16	1.041	0.156	6.424	8 7/16	0.590
170	AN 34	W 34	8	169.14	168.75	167.08	166.85	165.24	164.45	163.51	6.4	31.0	6.0	19.1	9.5	219.9	27.3	4.0	172.7	230.2	18.2
				6.659	6.6438	6.5778	6.5687	6.5056	6.4743	6 7/16	1/4	1 7/32	15/64	3/4	3/8	8 21/32	1.073	0.156	6.799	9 1/16	0.715
180	AN 36	W 36	8	179.48	179.09	177.41	177.18	175.58	174.79	174.63	6.4	31.8	6.0	19.1	9.5	230.2	28.0	4.0	183.0	239.7	18.2
				7.066	7.0508	6.9848	6.9757	6.9126	6.8813	6 7/8	1/4	1 1/4	15/64	3/4	3/8	9 1/16	1.104	0.156	7.206	9 7/16	0.715
190	AN 38	W 38	8	189.79	189.40	187.73	187.50	185.89	185.10	184.15	6.4	32.5	6.0	19.1	9.5	240.5	28.8	4.0	193.3	250.8	18.2
				7.472	7.4568	7.3908	7.3817	7.3186	7.2873	7 1/4	1/4	1 9/32	15/64	3/4	3/8	9 15/32	1.135	0.156	7.612	9 7/8	0.715
200	AN 40	W 40	8	199.31	198.93	197.25	196.96	195.42	194.62	193.68	6.4	34.1	6.0	22.2	9.5	250.0	30.4	4.0	203.6	261.9	21.3
				7.847	7.8318	7.7658	7.7544	7.6936	7.6623	7 5/8	1/4	1 11/32	15/64	7/8	3/8	9 27/32	1.198	0.156	8.017	10 5/16	0.840
220	N 44	W 44	8	219.15	218.77	217.09	216.78	215.25	214.46	211.14	6.4	34.9	9.5	27.0	9.5	279.4	31.8	3.2	221.1	290.5	23.9
				8.628	8.6128	8.5468	8.5347	8.4746	8.4433	8 5/16	1/4	1 3/8	3/8	1 1/16	3/8	11	1.250	0.125	8.703	11 7/16	0.940

[1] See page 120 for suggested S-3 shaft tolerances.

[2] For W, L, H, S, and M tolerance is -0 to +1/64 in, -0 to + 0.4mm.

INCH SHAFT ADAPTER ACCESSORIES FOR CYLINDRICAL BORE BEARINGS

LOCKNUT AND LOCKPLATE

- The table below shows dimensions for Locknuts and Lockwashers used in the mounting of cylindrical bore bearings on shafts.
- Other dimensions and tolerances related to shaft configurations also are shown.
- Dimensions are presented according to bearing bore size and are applicable to bearings in the various series (e.g., 222, 223, etc.).

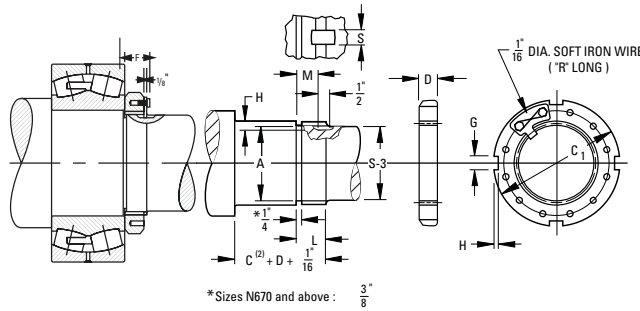

Bearing Bore	Lock-nut	Lock-washer	Thds. Per Inch	Threads: Major Dia. Max.	Threads: Major Dia. Min.	Threads: Pitch Dia. Max.	Threads: Pitch Dia. Min.	Threads: Minor Dia.	Threads: Relief Dia. A	Shaft[3]: S-3[1]	Shaft[3]: L -0 +1/64	Shaft[3]: H -0 +1/64	Shaft[3]: S -0 +1/64	Shaft[3]: M -0 +1/64	Locknut/Lockplate: C_1	Locknut/Lockplate: D	Locknut/Lockplate: G	Locknut/Lockplate: H ±.010"	Locknut/Lockplate: R	Locknut/Lockplate: F
mm				mm in.	mm in.	mm in.	mm in.	mm in.	mm in.	mm in.	mm in.	mm in.	mm in.	mm in.	mm in.	mm in.	mm in.	mm in.	mm in.	mm in.
240	N 048	P 48	6	239.83	239.31	237.08	236.76	234.63	233.44	233.36	42.86	11.1	28.6	34.9	290.5	34.1	22.48	9.5	203.2	43.26
				9.442	9.4218	9.3337	9.3213	9.2374	9.1905	9 3/16	1 11/16	7/16	1 1/8	1 3/8	11 7/16	1 11/32	0.885	3/8	8	1 45/64
260	N 052	P 52	6	258.88	258.36	256.13	255.8	253.68	252.49	252.41	45.24	11.1	30.2	37.3	309.6	35.7	22.48	9.5	228.6	44.85
				10.192	10.1718	10.0837	10.0707	9.9874	9.9405	9 15/16	1 25/32	7/16	1 3/16	1 15/32	12 3/16	1 13/32	0.885	3/8	9	1 49/64
280	N 056	P 56	6	279.50	278.99	276.75	276.42	274.31	273.11	273.05	47.63	11.1	31.8	39.7	330.2	38.1	25.65	9.5	228.6	47.23
				11.004	10.9838	10.8957	10.8827	10.7994	10.7525	10 3/4	1 7/8	7/16	1 1/4	1 9/16	13	1 1/2	1.010	3/8	9	1 55/64
300	N 060	P 60	6	299.34	298.83	296.59	296.26	294.14	292.95	292.1	49.21	11.1	34.9	41.3	360.4	39.7	25.65	12.7	254.0	50.01
				11.785	11.7648	11.6767	11.6637	11.5804	11.5335	11 1/2	1 15/16	7/16	1 3/8	1 5/8	14 3/16	1 9/16	1.010	1/2	10	1 31/32
320	N 064	P 64	6	319.08	318.56	316.32	315.98	313.88	312.69	312.74	51.59	11.1	36.5	43.7	381.0	42.1	25.65	12.7	254.0	52.39
				12.562	12.5418	12.4537	12.4402	12.3574	12.3105	12 5/16	2 1/32	7/16	1 7/16	1 23/32	15	1 21/32	1.010	1/2	10	2 1/16
340	N 068	P 68	5	337.90	337.49	335.36	334.95	332.31	331.11	331.79	56.36	11.1	38.1	48.4	400.1	45.2	25.65	12.7	279.4	55.56
				13.303	13.287	13.203	13.187	13.083	13.036	13 1/16	2 7/32	7/16	1 1/2	1 29/32	15 3/4	1 25/32	1.010	1/2	11	2 3/16
360	N 072	P 72	5	359.00	358.60	356.46	356.06	353.42	352.22	350.84	56.36	12.7	38.1	48.4	419.1	45.2	32.00	12.7	279.4	55.56
				14.134	14.118	14.034	14.018	13.914	13.867	13 13/16	2 7/32	1/2	1 1/2	1 29/32	16 1/2	1 25/32	1.260	1/2	11	2 3/16
380	N 076	P 76	5	378.99	378.59	376.45	376.05	373.41	372.21	371.48	59.53	12.7	38.1	51.59	450.9	48.4	32.00	15.1	304.8	61.12
				14.921	14.905	14.821	14.805	14.701	14.654	14 5/8	2 11/32	1/2	1 1/2	2 1/32	17 3/4	1 29/32	1.260	19/32	12	2 13/32
400	N 080	P 80	5	399.01	398.60	396.47	396.06	393.42	392.23	390.53	63.50	12.7	41.3	55.6	469.9	52.4	32.00	15.1	330.2	65.09
				15.709	15.693	15.609	15.593	15.489	15.442	15 3/8	2 1/2	1/2	1 5/8	2 3/16	18 1/2	2 1/16	1.260	19/32	13	2 9/16
420	N 084	P 84	5	419.00	418.59	416.46	416.05	413.41	412.22	411.16	63.50	12.7	41.3	55.6	490.5	52.4	35.18	15.1	330.2	65.09
				16.496	16.480	16.396	16.380	16.276	16.229	16 3/16	2 1/2	1/2	1 5/8	2 3/16	19 5/16	2 1/16	1.385	19/32	13	2 9/16
440	N 088	P 88	5	438.99	438.58	436.45	436.05	433.40	432.21	431.80	71.44	12.7	46.0	63.50	520.7	60.3	35.18	15.1	355.6	75.41
				17.283	17.267	17.183	17.167	17.063	17.016	17	2 13/16	1/2	1 13/16	2 1/2	20 1/2	2 3/8	1.385	19/32	14	2 31/32
460	N 092	P 92	5	459.00	458.60	456.46	456.06	453.42	452.22	450.85	71.44	12.7	46.0	63.50	539.8	60.3	35.18	15.1	406.4	75.41
				18.071	18.055	17.971	17.955	17.851	17.804	17 3/4	2 13/16	1/2	1 13/16	2 1/2	21 1/4	2 3/8	1.385	19/32	16	2 31/32
480	N 096	P 96	5	478.99	478.59	476.45	476.05	473.41	472.21	469.9	71.44	12.7	46.0	63.50	560.4	60.3	38.35	15.1	406.4	75.41
				18.858	18.842	18.758	18.742	18.638	18.591	18 1/2	2 13/16	1/2	1 13/16	2 1/2	22 1/16	2 3/8	1.510	19/32	16	2 31/32
500	N 500	P 500	5	499.01	498.60	496.47	496.06	493.42	492.23	489.0	79.4	12.7	46.0	71.4	579.4	68.3	38.35	15.1	406.4	83.3
				19.646	19.630	19.546	19.530	19.426	19.379	19 1/4	3 1/8	1/2	1 13/16	2 13/16	22 13/16	2 11/16	1.510	19/32	16	3 9/32
530	N 530	P 530	4	529.01	528.50	525.83	525.32	522.15	520.55	517.5	79.4	12.7	46.0	71.4	630.2	68.3	41.53	20.6	425.5	83.3
				20.827	20.807	20.702	20.682	20.557	20.494	20 3/8	3 1/8	1/2	1 13/16	2 13/16	24 13/16	2 11/16	1.635	13/16	16 3/4	3 9/32
560	N 560	P 560	4	559.00	558.50	555.83	555.32	552.15	550.55	549.3	85.7	12.7	46.0	77.8	649.3	71.4	41.53	20.6	476.3	89.7
				22.008	21.988	21.883	21.863	21.738	21.675	21 5/8	3 3/8	1/2	1 13/16	3 1/16	25 9/16	2 15/16	1.635	13/16	18 3/4	3 17/32
600	N 600	P 600	4	599.01	598.50	595.83	595.33	592.15	590.55	587.4	85.7	12.7	46.0	77.8	700.1	74.6	41.53	20.6	508.0	89.7
				23.583	23.563	23.458	23.438	23.313	23.250	23 1/8	3 3/8	1/2	1 13/16	3 1/16	27 9/16	2 15/16	1.635	13/16	20	3 17/32
630	N 630	P 630	4	629.01	628.50	625.83	625.32	622.15	520.55	619.1	85.7	12.7	50.8	77.8	730.3	74.6	47.88	20.6	520.7	92.1
				24.764	24.744	24.639	24.619	24.494	24.431	24 3/8	3 3/8	1/2	2	3 1/16	28 3/4	2 15/16	1.885	13/16	20 1/2	3 5/8
670	N 670	P 670	4	669.01	668.50	665.84	665.33	662.15	660.55	657.2	90.5	12.7	50.8	82.6	779.5	79.4	47.88	20.6	546.1	96.8
				26.339	26.319	26.214	26.194	26.069	26.006	25 7/8	3 9/16	1/2	2	3 1/4	30 11/16	3 1/8	1.885	13/16	21 1/2	3 13/16
710	N 710	P 710	3	709.02	708.33	704.77	704.09	700.02	698.42	695.3	101.6	15.9	50.8	93.7	830.3	90.5	51.30	25.4	571.5	108.0
				27.914	27.887	27.747	27.720	27.56	27.497	27 3/8	4	5/8	2	3 11/16	32 11/16	3 9/16	2.020	1	22 1/2	4 1/4
750	N 750	P 750	3	749.02	748.34	744.78	744.09	740.03	738.43	736.6	101.6	15.9	50.8	93.7	870.0	90.5	57.66	25.4	584.2	108.0
				29.489	29.462	29.322	29.295	29.135	29.072	29	4	5/8	2	3 11/16	34 1/4	3 9/16	2.270	1	23	4 1/4
800	N 800	P 800	3	799.01	798.32	794.77	794.08	790.02	788.42	787.4	101.6	15.9	50.8	93.7	920.8	90.5	57.66	25.4	616.0	108.0
				31.457	31.430	31.290	31.263	31.103	31.040	31	4	5/8	2	3 11/16	36 1/4	3 9/16	2.270	1	24 1/4	4 1/4
850	N 850	P 850	3	849.02	848.34	844.78	844.09	840.03	838.43	835.0	101.6	15.9	50.8	93.7	979.5	90.5	64.01	25.4	647.7	108.0
				33.426	33.399	33.259	33.232	33.072	33.009	32 7/8	4	5/8	2	3 11/16	38 9/16	3 9/16	2.520	1	25 1/2	4 1/4
900	N 900	P 900	3	899.01	898.32	894.77	894.08	890.02	888.42	885.8	111.1	15.9	50.8	103.2	1030.3	100.0	64.01	25.4	666.8	117.5
				35.394	35.367	35.227	35.200	35.040	34.977	34 7/8	4 3/8	5/8	2	4 1/16	40 9/16	3 15/16	2.520	1	26 1/4	4 5/8
950	N 950	P 950	3	949.02	948.33	944.78	944.09	940.03	938.43	933.5	114.3	19.1	50.8	108	1092.2	100.0	64.01	25.4	692.2	117.5
				37.363	37.336	37.196	37.169	37.009	36.946	36 3/4	4 1/2	3/4	2	4 1/4	43	3 15/16	2.520	1	27 1/4	4 5/8

(1) See page 120 for suggested S-3 shaft tolerances.

(2) C is outer ring width which may be obtained from bearing dimension tables.

(3) For L, H, S, and M tolerance is -0 to +1/64 in, -0 to + 0.4mm.

MOUNTING PROCEDURES

Depending on the size of the bearing and the application, there are different methods for mounting roller bearings. In all methods, certain basic rules must be followed.

CLEANLINESS

- Choose a clean environment, free from dust and moisture.
- The installer should make every effort to ensure cleanliness by use of protective screens and clean cloths.

PLAN THE WORK

- Know in advance your plans and have the necessary tools at hand. This reduces the amount of time for the job and decreases the chance for dirt to get into the bearing.

INSPECTION AND PREPARATION

- All component parts of the machine should be on hand and thoroughly cleaned before proceeding.
- Housings should be cleaned, including blowing out the oil holes.
- Do not use air hose on bearings.
- If blind holes are used, insert a magnetic rod to remove metal chips that might be lodged there during fabrication.
- Shaft shoulders and spacer rings contacting the bearing should be square with the shaft axis.
- The shaft fillet must be small enough to clear the radius of the bearing.
- On original installations, all component parts should be checked against the detail specification prints for dimensional accuracy. Shaft and housing should be carefully checked for size and form (roundness, etc.).

SHAFT AND HOUSING FINISH

- Shaft surfaces on which the bearing will be mounted must be clean and free from nicks and burrs.
- For applications with stationary housing and rotating shaft, it is suggested that the bearing seat on the shaft be ground to 1.6 µm (65 µin.) Ra maximum.
- If it is impractical to use a ground finish, a machined finish of 3.2 µm (125 µin.) Ra is acceptable in many cases, but the amount of interference fit should be slightly increased.
- Housing bores should be finished to 3.2 µm (125 µin) Ra maximum.

Note: *Do not remove the bearing from its wrapping until you are ready to mount it.*

MOUNTING CYLINDRICAL BORE BEARINGS

Heat Expansion Method

- Most applications require a tight interference fit on the shaft.
- Mounting is simplified by heating the bearing to expand it sufficiently to slide easily onto the shaft.
- Two methods of heating are commonly used:
  - Tank of heated oil.
  - Induction heating.
- The first is accomplished by heating the bearing in a tank of oil that has a high flash point.
- The oil temperature should not be allowed to exceed 121˚ C (250˚ F). A temperature of 93˚ C (200˚ F) is sufficient for most applications.
- The bearing should be heated for 20 or 30 minutes, or until it is expanded sufficiently to slide onto the shaft easily.
- The induction heating method is used for mounting small bearings in production line assembly.
- Induction heating is rapid. Care must be taken to prevent bearing temperature from exceeding 93˚ C (200˚ F).
- Trial runs with the unit and bearing are usually necessary to obtain proper timing.
- Thermal crayons melted at predetermined temperatures can be used to check the bearing temperature.
- While the bearing is hot, it should be positioned squarely against the shoulder.
- Lockwashers and Locknuts or clamping plates are then installed to hold the bearing against the shoulder of the shaft.
- As the bearing cools, the Locknut or clamping plate should be tightened.
- In cases of outer ring rotation, where the outer ring is a tight fit in the housing, the housing member can be expanded by heating.
- The oil bath is shown in Fig. 26. The bearing should not be in direct contact with the heat source.
- The usual arrangement is to have a screen several inches from the bottom of the tank. Small support blocks separate the bearing from the screen.
- It is important to keep the bearing away from any localized high-heat source that may raise its temperature excessively, resulting in race hardness reduction.

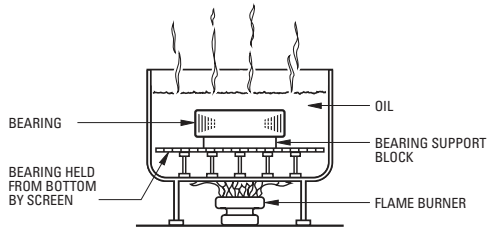

Fig. 26. Heat Expansion Method.

- Flame-type burners are commonly used. An automatic device for temperature control is desirable.
- If safety regulations prevent the use of an open heated oil bath, a mixture of 15 percent soluble-oil water may be used. This mixture may be heated to a maximum of 93˚ C (200˚ F) without being flammable.

B

MOUNTING PROCEDURES - *continued*

MOUNTING CYLINDRICAL BORE BEARINGS - *continued*

Arbor Press Method

- The alternate method of mounting, generally used only on smaller sizes, is to press the bearing onto the shaft or into the housing. This can be done by using an arbor press and a mounting tube as shown in Fig. 27.
- The tube can be made from soft steel with an inside diameter slightly larger than the shaft.
- The O.D. of the tube should not exceed the maximum shoulder height given in the table of dimensions.
- The tube should be faced square at both ends. It should be thoroughly clean inside and out and long enough to clear the end of the shaft after the bearing is mounted.

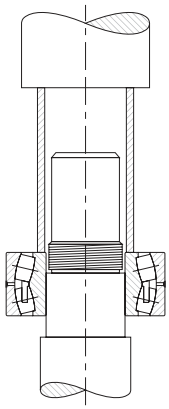

Fig. 27. Arbor press method.

- If the outer ring is being pressed into housing, the O.D. of the mounting tube should be slightly smaller than the housing bore. The I.D. should not be less than the suggested housing backing diameter in the table of dimensions.
- Coat the shaft with a light machine oil to reduce the force needed for a press fit.
- Carefully place the bearing on the shaft, making sure it is square with the shaft axis.
- Apply steady pressure from the arbor ram to drive the bearing firmly against the shoulder.
- Never attempt a press fit on a shaft by applying pressure to the outer ring or a press fit in a housing by applying pressure to the inner ring.

SHAFT MOUNTING TAPERED BORE SPHERICAL ROLLER BEARINGS

- Use a feeler gage with the thinnest blade of .0015 in.
- Place the bearing in an upright position with the inner and outer ring faces parallel.
- Place thumbs on the inner ring bore and oscillate the inner ring two or three elements.
- Position the individual roller assemblies so that a roller is at the top of the inner ring on both sides of the bearing.
- With the roller in the correct position, insert a thin blade of the feeler gage between the roller and the outer ring.
- Move it carefully along the top roller between the roller and outer ring raceway. Repeat this procedure using thicker feeler gage blades until one is found that will not go through.
- The blade thickness that preceded the “no-go” blade is a measure of RIC before installation.
- Start the mounting procedure by lubricating the tapered shaft with a light coat of machine oil.

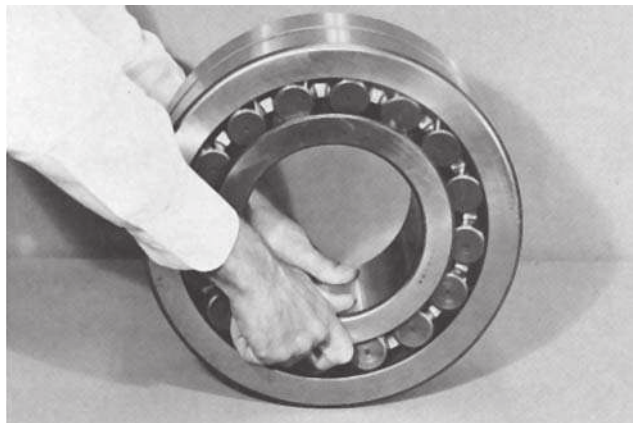

Fig. 28.

- Slide the bearing onto the shaft as far as it will go by hand.
- As the Locknut is tightened, the interference fit builds up, resulting in expansion of the inner ring.
- Periodically measure to keep track of the reduction in RIC.
- Continue the procedure until the proper amount of reduction is obtained. Do not exceed suggested amount of reduction.
- As a final check, make sure the remaining RIC equals or exceeds the minimum mounted clearance shown in the table to the right.

MOUNTING PROCEDURES - *continued*

MOUNTING TIMKEN® TAPERED BORE SPHERICAL ROLLER BEARINGS

Nominal bearing bore (mm)		Radial Internal Clearance prior to mounting (mm)						Suggested reduction of RIC (mm)		Axial displacement tapered shaft installation (mm)				Minimum permissible RIC after installation		
		Normal		C3		C4				1:12 Taper**		1:30 Taper**		Normal	C3	C4
over	incl.	Min.	Max.	Min.	Max.	Min.	Max.	Min.	Max.	Min.	Max.	Min.	Max.			
30	40	0.035	0.050	0.050	0.065	0.065	0.085	0.020	0.025	0.300	0.380	-	-	0.015	0.025	0.040
40	50	0.045	0.060	0.060	0.080	0.080	0.100	0.025	0.030	0.380	0.460	-	-	0.020	0.030	0.050
50	65	0.055	0.075	0.075	0.095	0.095	0.120	0.030	0.040	0.460	0.560	-	-	0.025	0.040	0.060
65	80	0.070	0.095	0.095	0.120	0.120	0.150	0.040	0.050	0.560	0.760	-	-	0.025	0.045	0.075
80	100	0.080	0.110	0.100	0.140	0.140	0.180	0.045	0.065	0.680	0.970	-	-	0.035	0.050	0.075
100	120	0.100	0.135	0.135	0.170	0.170	0.220	0.050	0.070	0.760	1.070	1.900	2.540	0.050	0.060	0.100
120	140	0.120	0.160	0.160	0.200	0.200	0.260	0.065	0.090	0.890	1.270	2.290	3.050	0.055	0.075	0.115
140	160	0.130	0.180	0.180	0.230	0.230	0.300	0.075	0.100	1.140	1.520	2.670	3.430	0.055	0.075	0.125
160	180	0.140	0.200	0.200	0.260	0.260	0.340	0.075	0.115	1.140	1.650	2.670	4.060	0.060	0.090	0.150
180	200	0.160	0.220	0.220	0.290	0.290	0.370	0.090	0.125	1.400	1.900	3.050	4.450	0.070	0.100	0.165
200	225	0.180	0.250	0.250	0.320	0.320	0.410	0.100	0.140	1.520	2.030	3.560	4.830	0.075	0.115	0.180
225	250	0.200	0.270	0.270	0.350	0.350	0.450	0.115	0.150	1.780	2.290	4.060	5.330	0.090	0.115	0.200
250	280	0.220	0.300	0.300	0.390	0.390	0.490	0.115	0.165	1.780	2.540	4.060	5.840	0.100	0.140	0.230
280	315	0.240	0.330	0.330	0.430	0.430	0.540	0.125	0.180	1.900	2.670	4.450	6.220	0.100	0.150	0.250
315	355	0.270	0.360	0.360	0.470	0.470	0.590	0.140	0.190	2.030	2.790	4.830	6.600	0.115	0.165	0.280
355	400	0.300	0.400	0.400	0.520	0.520	0.650	0.150	0.200	2.290	3.050	5.330	7.110	0.130	0.190	0.330
400	450	0.330	0.440	0.440	0.570	0.570	0.720	0.165	0.215	2.540	3.300	5.840	7.620	0.150	0.230	0.360
450	500	0.370	0.490	0.490	0.630	0.630	0.790	0.180	0.230	2.670	3.430	6.220	8.000	0.165	0.270	0.410
500	560	0.410	0.540	0.540	0.680	0.680	0.870	0.200	0.250	3.050	3.810	7.110	8.890	0.180	0.290	0.440
560	630	0.460	0.600	0.600	0.760	0.760	0.980	0.230	0.280	3.430	4.190	8.000	9.780	0.200	0.320	0.510
630	710	0.510	0.670	0.670	0.850	0.850	1.090	0.250	0.300	3.810	4.570	8.890	10.670	0.200	0.370	0.550
710	800	0.570	0.750	0.750	0.960	0.960	1.220	0.280	0.350	4.190	5.330	9.780	12.450	0.230	0.390	0.610
800	900	0.640	0.840	0.840	1.070	1.070	1.370	0.300	0.380	4.570	5.720	10.670	13.330	0.250	0.460	0.690
900	1000	0.710	0.930	0.930	1.190	1.190	1.520	.0350	0.430	5.334	6.480	12.450	15.110	0.280	0.490	0.750
1000	1120	0.770	1.030	1.030	1.300	1.300	1.670	0.400	0.480	6.100	7.240	14.220	16.890	0.280	0.550	0.810
1120	1250	0.830	1.120	1.120	1.420	1.420	1.830	0.430	0.500	6.480	7.620	15.110	17.780	0.330	0.610	0.910

Table 29.

Note: Axial displacement values apply to solid steel shafts or hollow steel shafts with bore diameter less than half the shaft diameter. For shaft materials other than steel, or for thin-wall shafts, please consult your Timken representative.

** 1:12 Taper used for 222, 223, 230, 231, 232, 233, 239 series. 1: 30 Taper used for 240, 241, 242 series. For sleeve mounting, multiply axial displacement values by 1.1 for 1:12 taper or by 1.05 for 1:30 taper. For questions on tapered shaft data, consult your Timken representative.

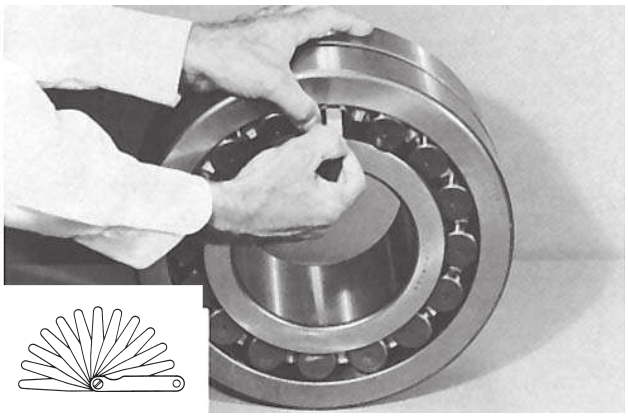

Fig. 29.

- During mounting, the RIC should be checked at the unloaded roller. If this is at the bottom, make sure that the roller is raised to seat firmly at the inboard position of the inner race.
- When the suggested amount of RIC reduction has been accomplished, the bearing is properly fitted.
- Complete the procedure by peening the Lockwasher tang into the Locknut slot or securing the Lockplate.

NOTES

SPHERICAL ROLLER BEARING PILLOW BLOCKS

Overview: Spherical roller bearing pillow blocks combine rugged cast iron or steel housings with high-capacity bearings to meet the toughest demands of industry. Each pillow block contains an advanced-design spherical roller bearing with improved geometry and raceway finish for maximum load capacity and service life. Integrated housing and bearing features enhance unit lubrication characteristics. Multiple sealing options protect against contamination.

- **Sizes:** 35 - 300 mm shafts (1.37795 - 11.811 in.). Special shaft sizes up to 1000 mm (39.37 in.) and beyond.
- **Markets:** Conveyors, mining, rolling mills, heavy movable structures and pulp, and paper mills.
- **Features:** Split construction for convenient assembly and disassembly. These units include pry tool slots and the exclusive Pry-Lug fulcrum, which simplify bearing inspection, service, and replacement.
- **Benefits:** Caps can be removed easily and quickly without damage to the bearing or housing.

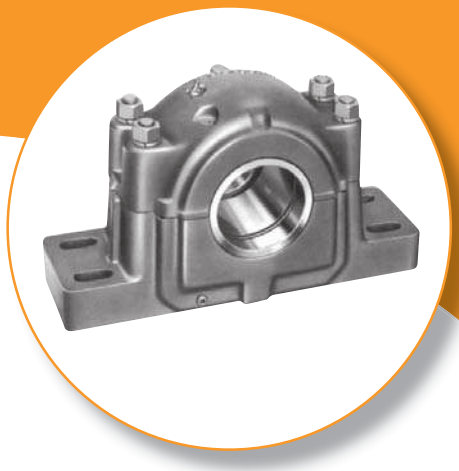

Pillow Blocks

SAF two- or four-bolt pillow block, cast iron
SDAF four-bolt heavy-duty type pillow block, cast iron
SAFS two- or four-bolt pillow block, cast steel
FSAF four-bolt pillow block, cast iron (only when an option)
FSAFS four-bolt pillow block, cast steel (only when an option)
SDAFS four-bolt heavy-duty pillow block, cast steel

To indicate shaft size and used only for pillow block units of $8\,^{7}/_{16}$ in. shaft size or larger.

SDAF **23152** **K** – **9 1/2** **FXOP**

Number indicates basic spherical bearing series. See product data charts for spherical bearing number.

K indicated on adapter type mounting arrangement (for 230, 231, 232 Series, SDAF231K and SDAF232K Series)
DV DUSTAC seals - both sides
DC DUSTAC seals - one side

Indicate construction:
FXOP fixed open
FXCL fixed closed
FLOP float open
FLCL float closed

Spherical Roller Bearing Pillow Blocks

B

B

INTRODUCTION

Timken's capabilities in the engineering and manufacture of heavy-duty pillow blocks provide important user benefits. In addition, Timken's worldwide sales organization is staffed with experienced bearing engineers who are available for consultation on any pillow block or bearing application. Expert engineering assistance is available for applications involving shaft sizes 40 inches and larger such as BOF trunnions, bridge blocks and ball mills. If your design calls for shaft sizes or loads not listed in this catalog, contact your Timken representative for information about availability of special units.

DESIGN AND CONSTRUCTION

Timken supplies pillow blocks equipped with either tapered bore bearings plus adapters for mounting on straight shafts or cylindrical bore bearings for assembly on shouldered shafts.

Timken spherical roller bearing pillow blocks are made of split construction for convenient assembly and disassembly. These units include pry tool slots and the exclusive Pry-Lug fulcrum that simplify bearing inspection, service, and replacement. Caps can be removed easily and quickly without damage to the bearing or housing.

Precision fit is ensured by the Timken system of doweling caps and bases together at an early stage of manufacturing, so that they remain a single unit during machining. They are not interchangeable as separate parts and become precisely mated components.

Timken manufactures pillow blocks in two styles: SAF and SDAF. The larger SDAF block is suggested for extreme duty applications.

Caps and bases are made from high-grade, stress-relieved cast iron as standard. They also are available in cast steel.

All Timken pillow blocks are designed for four-bolt mounting. Certain smaller sizes are normally furnished for two-bolt mounting. These assemblies are indicated in the tables and can be ordered with optional four-bolt base.

Four cap bolts are used in most Timken pillow blocks in order to equalize the pressure between cap and base, preventing loss of lubricant.

The illustration below shows all parts of a pillow block assembly that are described throughout this section.

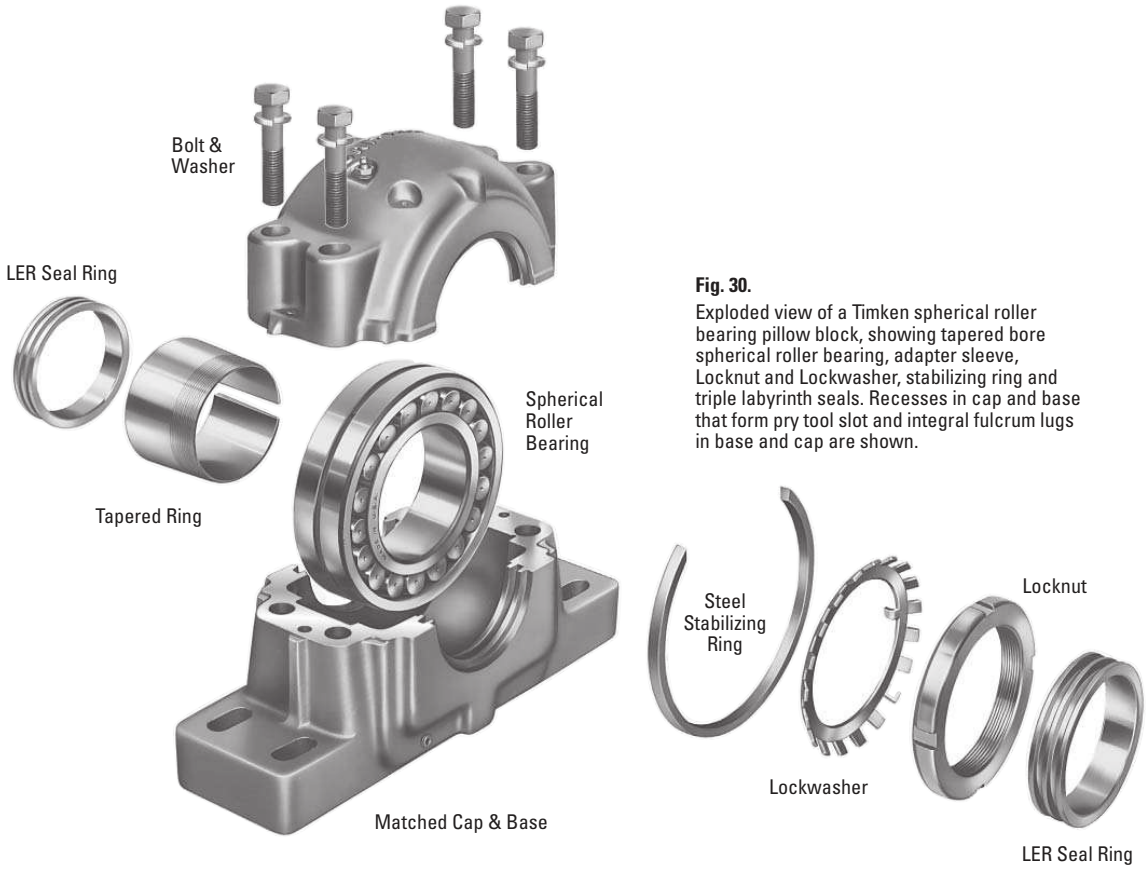

Fig. 30.
Exploded view of a Timken spherical roller bearing pillow block, showing tapered bore spherical roller bearing, adapter sleeve, Locknut and Lockwasher, stabilizing ring and triple labyrinth seals. Recesses in cap and base that form pry tool slot and integral fulcrum lugs in base and cap are shown.

B

MOUNTING

ADAPTER VS. STRAIGHT BORE

Usually a spherical roller bearing pillow block assembly is mounted on a straight shaft using a tapered bore bearing and adapter assembly. Standard commercial shafting can be used without additional machining. (Suggested shaft diameters are shown on page 120.) Adapter mount also permits maximum flexibility in the axial positioning of the bearing on the shaft and will accommodate light locational thrust loads. Timken pillow blocks for tapered bore and adapter mounted bearings are available in Series 225, 226, 230, 231K and 232K.

Adapter mounted spherical roller bearings require the correct removal of diametral clearance from the bearing to prevent relative rotation between inner race and sleeve or shaft. Failure to employ proper mounting procedures can cause heating and reduced bearing performance. For proper shaft mounting of adapter type spherical roller bearings, see page 104 of the spherical roller bearing section.

When application conditions produce heavy thrust loads, or a need exists for exact axial location or a positive shaft interference fit, a direct straight bore mounting may be the best option. This requires a shouldered shaft, machined for proper fit, and a straight bore bearing. Timken pillow block assemblies for straight bore applications are available in Series 222, 223, 231 and 232.

Suggested fits for shafts in cylindrical bore spherical roller bearings are shown in the engineering section. For applications involving heavy shock, vibration, unbalanced rotating loads or other abnormal conditions, consult your Timken representative.

FIXED AND FLOAT PILLOW BLOCKS

Any style of Timken pillow blocks can be easily installed either at the float or fixed position on the shaft. For the fixed position, a stabilizing ring is added between the bearing outer face ring and the housing shoulder to positively locate the shaft and prevent axial movement.

Some applications require centering of the bearing in its housing. To accomplish this, two special width stabilizing rings can be ordered.

In the float position, the ring is not used, allowing the bearing to move axially (a maximum of $^{3}/_{8}$ in.) to compensate for thermal expansion or contraction of the shaft.

Pillow blocks ordered by the numbers in the dimension tables are fixed units. To order float units, specify by adding suffix “Float” or “FL” to the pillow block number.

CLOSED END INSTALLATIONS

In some applications, the shaft end is designed to terminate inside the pillow block. For this design, positive fitting end-closure inserts are available to seal out contaminants and retain lubricant. Timken heavy-duty end plugs include O-rings for positive sealing.

Designers and installers need to make sure the shaft end does not contact the closure. A minimum of $^{1}/_{8}$ in. clearance at maximum thermal expansion is suggested between the end of the shaft and the closure. Dimension “Y” in the tables defines the maximum permissible length of the shaft from the centerline of the pillow block housing. If end closure is desired, specify by adding “CL” (one end closed) to the pillow block assembly number.

LUBRICATION

Timken pillow block housings have been designed for grease and oil bath lubrication. They also can be modified easily to accommodate circulating oil or oil/air mist systems. Grease fittings or sight gages are available upon request.

A lubrication groove and oil holes are provided in the bearing outer ring. This feature, designated by adding suffix “W33” to the bearing number, should be specified whenever re-ordering bearings for pillow blocks. In most cases, the fresh lubricant is fed directly to the center of the bearing between the rows of rollers and distributed to the rest of the bearing. This ensures the used lubricant is purged from the bearing.

SEALS

Precision triple ring labyrinth seals are supplied with all Timken pillow blocks to exclude foreign matter and retain lubricants. The pillow block base includes extra large oil return holes at the bottom of the seal grooves to prevent leakage past the seals.

For extremely contaminated or abrasive environments, Timken has developed the exclusive DUSTAC™ seal. This patented seal offers protection against concentrations of dust or abrasive material that a labyrinth seal cannot keep out. See page 123 for further information on DUSTAC.

LOAD RATINGS AND LIFE

Load ratings for the spherical roller bearings that are used in pillow blocks are found in the dimension tables on pages 80 through 96. Life calculation formulas are found in the engineering section.

In addition to individual bearing selection, the ability of the pillow block to carry the operating load should be considered.

It should be noted that the load rating figures supplied in this catalog are applicable only when the load direction is generally toward the base of the pillow block. If the pillow block must be mounted so the load can be applied in any other direction, consult your Timken representative.

INCH TAPERED BORE MOUNTING SAF225 AND SAF226 SERIES

- The basic number for ordering complete pillow block assemblies is listed in the table below.
- Each assembly includes the housing cap and base, cap bolts, bearing, bearing adapter, Locknut and washer, stabilizing ring, and triple ring seals.
- If only the pillow block housing is desired, use the numbers listed in column headed "Housing Only". These units include: cap, base, cap bolts, triple ring seals and stabilizing ring.
- Assembly and pillow blocks as described on this page constitute a fixed unit. To order float units, specify part number plus suffix "Float" or "FL".

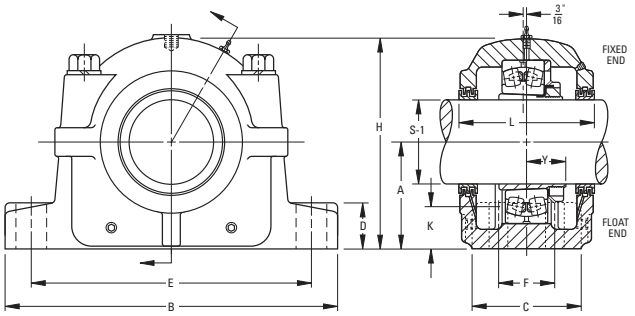

- Assemblies shown are furnished in cast iron. If cast steel is desired, add the letter "S" to the alpha prefix (e.g., SAFS 22515).
- Four-bolt bases are standard on all assemblies except as noted.

Pillow Block Assembly	Standard Shaft[1] Diam S-1	A	B	C	D	E (Max.)	E (Min.)	F	H	K Oil Level	L	Y	Base Bolts Required No.	Base Bolts Required Size	Bearing Number	Adapter[4] Assembly Number	Housing[2] Only	Stabi-[3] lizing Ring 1 Req'd	Triple Seal 2 Req'd	Ass'y Wt.
	in.	in.	in.	in.	in.	in.	in.	in.	in.	in.	in.	in.		in.						lbs.
SERIES SAF225																				
SAF22509	1 7/16	2 1/4	8 1/4	2 3/8	13/16	7	6 1/4	—	4 3/8	31/32	3 5/8	1 3/32	2	1/2	22209K	SNW-9	SAF509	SR-9-9	LER 17	12
SAF22510	1 11/16	2 1/2	8 1/4	2 3/8	15/16	7	6 1/2	—	4 3/4	1 3/32	3 5/8	1 5/32	2	1/2	22210K	SNW-10	SAF510	SR-10-0	LER 20	13
SAF22511	1 15/16	2 3/4	9 5/8	2 3/4	15/16	7 7/8	7 3/8	—	5 11/32	1 3/16	3 3/4	1 3/16	2	1/2	22211K	SNW-11	SAF511	SR-11-0	LER 24	16
SAF22513	2 3/16	3	11	3 1/8	1	9 1/2	8 1/8	—	5 25/32	1 1/8	4 5/16	1 7/32	2	1/2	22213K	SNW-13	SAF513	SR-13-0	LER 29	19.5
SAF22515	2 7/16	3 1/4	11 1/4	3 1/8	1 1/8	9 5/8	8 5/8	—	6 3/8	1 1/4	4 3/4	1 9/32	2	5/8	22215K	SNW-15	SAF515	SR-15-0	LER37	30
FSAF22515	2 7/16	3 1/4	11 1/4	3 1/8	1 1/8	9 5/8	8 5/8	1 7/8	6 3/8	1 1/4	4 3/4	1 9/32	4	1/2	22215K	SNW-15	FSAF515	SR-15-0	LER37	30
SAF22516	2 11/16	3 1/2	13	3 1/2	1 3/16	11	9 5/8	—	6 7/8	1 11/32	4 7/8	1 21/64	2	3/4	22216K	SNW-16	SAF516	SR-16-13	LER44	37
FSAF22516	2 11/16	3 1/2	13	3 1/2	1 3/16	11	9 5/8	2 1/8	6 7/8	1 11/32	4 7/8	1 21/64	4	5/8	22216K	SNW-16	FSAF516	SR-16-13	LER44	37
SAF22517	2 15/16	3 3/4	13	3 1/2	1 1/4	11	9 7/8	—	7 1/4	1 7/16	4 15/16	1 27/64	2	3/4	22217K	SNW-17	SAF517	SR-17-14	LER53	40
FSAF22517	2 15/16	3 3/4	13	3 1/2	1 1/4	11	9 7/8	2 1/8	7 1/4	1 7/16	4 15/16	1 27/64	4	5/8	22217K	SNW-17	FSAF517	SR-17-14	LER53	40
SAF22518	3 3/16	4	13 3/4	3 7/8	1 1/2	11 5/8	10 3/8	—	7 3/4	1 17/32	6 1/4	1 37/64	2	3/4	22218K	SNW-18	SAF518	SR-18-15	LER69	49
FSAF22518	3 3/16	4	13 3/4	3 7/8	1 1/2	11 5/8	10 3/8	2 1/8	7 3/4	1 17/32	6 1/4	1 37/64	4	5/8	22218K	SNW-18	FSAF518	SR-18-15	LER69	49
SAF22520	3 7/16	4 1/2	15 1/4	4 3/8	1 3/4	13 1/8	11 5/8	—	8 11/16	1 3/4	6	1 49/64	2	7/8	22220K	SNW-20	SAF520	SR-20-17	LER102	65
FSAF22520	3 7/16	4 1/2	15 1/4	4 3/8	1 3/4	13 1/8	11 5/8	2 3/8	8 11/16	1 3/4	6	1 49/64	4	3/4	22220K	SNW-20	FSAF520	SR-20-17	LER102	65
SAF22522	3 15/16	4 15/16	16 1/2	4 3/4	2	14 1/2	12 5/8	2 3/4	9 9/16	1 7/8	6 3/8	1 61/64	4	3/4	22222K	SNW-22	SAF522	SR-22-19	LER109	81
SAF22524	4 3/16	5 1/4	16 1/2	4 3/4	2 1/8	14 1/2	13 1/4	2 3/4	10 1/4	1 15/16	7 3/8	2 3/32	4	3/4	22224K	SNW-24	SAF524	SR-24-20	LER113	94
SAF22526	4 7/16	6	18 3/8	5 1/8	2 3/8	16	14 5/8	3 1/4	11 9/16	2 7/16	8	2 17/64	4	7/8	22226K	SNW-26	SAF526	SR-26-0	LER117	137
SAF22528	4 15/16	6	20 1/8	5 7/8	2 3/8	17 1/8	16	3 3/8	11 3/4	2 1/8	7 3/4	2 13/32	4	1	22228K	SNW-28	SAF528	SR-28-0	LER122	159
SAF22530	5 3/16	6 5/16	21 1/4	6 1/4	2 1/2	18 1/4	17	3 3/4	12 1/2	2 3/16	8 3/8	2 37/64	4	1	22230K	SNW-30	SAF530	SR-30-0	LER125	189
SAF22532	5 7/16	6 11/16	22	6 1/4	2 5/8	19 1/4	17 3/8	3 3/4	13 5/16	2 3/16	8 3/4	2 49/64	4	1	22232K	SNW-32	SAF532	SR-32-0	LER130	225
SAF22534	5 15/16	7 1/16	24 3/4	6 3/4	2 3/4	21 5/8	19 3/8	4 1/4	14 9/16	2 5/16	9 3/8	2 59/64	4	1	22234K	SNW-34	SAF534	SR-34-0	LER140	300
SAF22536	6 7/16	7 1/2	26 3/4	7 1/8	3	23 5/8	20 7/8	4 5/8	15 1/2	2 9/16	9 11/16	2 61/64	4	1	22236K	SNW-36	SAF536	SR-36-30	LER148	330
SAF22538	6 15/16	7 7/8	28	7 1/2	3 1/8	24 3/8	21 5/8	4 1/2	15 11/16	2 5/8	10 3/4	3 7/64	4	1 1/4	22238K	SNW-38	SAF538	SR-38-32	LER155	375
SAF22540	7 3/16	8 1/4	29 1/2	8	3 3/8	25	22 1/2	5	17 3/16	2 11/16	10 13/16	3 9/32	4	1 1/4	22240K	SNW-40	SAF540	SR-40-34	LER159	445
SAF22544	7 15/16	9 1/2	32 3/4	8 3/4	3 3/4	27 7/8	24 3/4	5 1/4	19 5/8	3 3/8	11 1/2	3 17/32	4	1 1/2	22244K	SNW-44	SAF544	SR-44-38	LER167	615
SERIES SAF226																				
SAF22615	2 7/16	4	13 3/4	3 7/8	1 5/8	11 5/8	10 3/8	2 1/8	7 9/16	1 19/32	5 7/8	1 7/8	2,4	3/4, 5/8	22315K	SNW-115	SAF615	SR-18-15	LOR37	52
SAF22616	2 11/16	4 1/4	14 1/4	3 7/8	1 3/4	12 5/8	10 5/8	2 1/8	8 1/4	1 11/16	6 1/2	1 15/16	2,4	3/4, 5/8	22316K	SNW-116	SAF616	SR-19-16	LOR 44	71
SAF22617	2 15/16	4 1/2	15 1/4	4 3/8	1 3/4	13 1/8	11 5/8	—	8 11/16	1 13/16	6 5/8	1 57/64	2	7/8	22317K	SNW-117	SAF617	SR-20-17	LER184	81
FSAF22617	2 15/16	4 1/2	15 1/4	4 3/8	1 3/4	13 1/8	11 5/8	2 3/8	8 11/16	1 13/16	6 5/8	1 57/64	4	3/4	22317K	SNW-117	FSAF617	SR-20-17	LER184	81
SAF22618	3 3/16	4 3/4	15 1/2	4 3/8	2	13 1/2	12	2 1/4	9 3/16	2	7	2 3/64	4	3/4	22318K	SNW-118	SAF618	SR-21-18	LER188	90
SAF22620	3 7/16	5 1/4	16 1/2	4 3/4	2 1/8	14 1/2	13 1/4	2 3/4	10 1/4	2 1/8	7 3/8	2 19/64	4	3/4	22320K	SNW-120	SAF620	SR-24-20	LER102	113
SAF22622	3 15/16	6	18 3/8	5 1/8	2 3/8	16	14 5/8	3 1/4	11 9/16	2 1/2	8	2 31/64	4	7/8	22322K	SNW-122	SAF622	SR-0-22	LER109	151
SAF22624	4 3/16	6 5/16	21 1/4	6 1/4	2 1/2	18 1/4	17	3 3/4	12 1/2	2 9/16	8 3/8	2 41/64	4	1	22324K	SNW-124	SAF624	SR-0-24	LER113	201
SAF22626	4 7/16	6 11/16	22	6 1/4	2 5/8	19 1/4	17 3/8	3 3/4	13 5/16	2 5/8	8 3/4	2 27/32	4	1	22326K	SNW-126	SAF626	SR-0-26	LER117	245
SAF22628	4 15/16	7 1/16	24 3/4	6 3/4	2 3/4	21 5/8	19 3/8	4 1/4	14 9/16	2 11/16	9 3/8	3 5/64	4	1	22328K	SNW-128	SAF628	SR-0-28	LER122	310
SAF22630	5 3/16	7 1/2	26 3/4	7 1/8	3	23 5/8	20 7/8	4 5/8	15 1/2	2 7/8	9 11/16	3 17/64	4	1	22330K	SNW-130	SAF630	SR-36-30	LER125	350
SAF22632	5 7/16	7 7/8	28	7 1/2	3 1/8	24 3/8	21 5/8	4 1/2	15 11/16	2 15/16	10 3/4	3 7/16	4	1 1/4	22332K	SNW-132	SAF632	SR-38-32	LER130	420
SAF22634	5 15/16	8 1/4	29 1/2	8	3 3/8	25	22 1/2	5	17 3/16	3 1/16	10 13/16	3 19/32	4	1 1/4	22334K	SNW-134	SAF634	SR-40-34	LER140	485
SAF22636	6 7/16	8 7/8	31 1/4	8 1/4	3 1/2	26 5/8	24	5 1/4	18 1/2	3 3/8	11 1/4	3 47/64	4	1 1/4	22336K	SNW-136	SAF636	SR-0-36	LER148	545
SAF22638	6 15/16	9 1/2	32 3/4	8 3/4	3 3/4	27 7/8	24 3/4	5 1/4	19 5/8	3 11/16	11 1/2	3 57/64	4	1 1/2	22338K	SNW-138	SAF638	SR-44-38	LER155	655
SAF22640	7 3/16	9 7/8	34 1/4	9	4	29 1/2	26 1/4	5 1/2	20 3/16	3 3/4	12 1/4	4 5/64	4	1 1/2	22340K	SNW-140	SAF640	SR-0-40	LER159	725

[1] See page 120 for suggested shaft diameter S-1 tolerances.
[2] "Housing Only" includes: cap, base, cap bolts, triple ring seals and stabilizing rings as required.
[3] Stabilizing ring is used for fixed (FX) block; do not use for float (FL) mounting.
[4] Includes sleeve, Locknut and Lockwasher. Add shaft size to order.

Note: Speed ratings are found in dimension tables in the spherical roller bearing section.

B

INCH TAPERED BORE MOUNTING SDAF225 AND SDAF226 SERIES

- Each assembly includes the housing cap and base, cap bolts, bearing, bearing adapter, Locknut and washer, stabilizing ring and triple ring seals.
- To order pillow block housing only, use the number listed in the "Housing Only" column. These units include: cap, base, cap bolts, triple ring seals and stabilizing ring.
- Assembly and pillow blocks as described on this page constitute fixed units.
- To order float units, specify part number plus suffix "Float" or "FL".
- Assemblies shown are furnished in cast iron. If cast steel is desired, add the letter "S" to the alpha prefix (e.g., SAFS 22515).

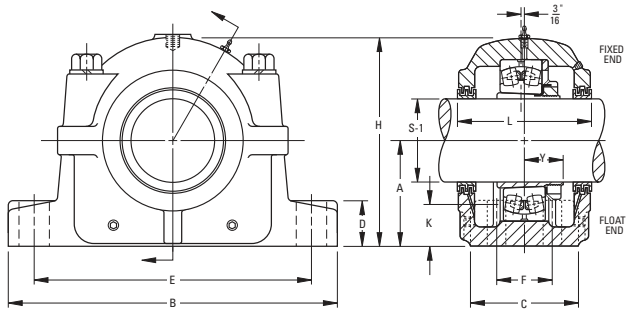

Pillow Block Assembly	Standard Shaft[1] Diam. S-1	A	B	C	D	E (Max.)	E (Min.)	F	H	K Oil Level	L	Y	Base Bolts Required No.	Base Bolts Required Size	Bearing Number	Adapter[4] Assembly Number	Housing[2] Only	Stabi-lizing[3] Ring 1 Req'd	Triple Seal 2 Req'd	Ass'y Wt.
	in.	in.	in.	in.	in.	in.	in.	in.	in.	in.	in.	in.		in.						lbs.
SERIES SDAF225																				
SDAF22520	3 7/16	4 1/2	15 1/4	6	1 7/8	13 1/8	11 5/8	3 3/8	8 15/16	1 3/4	6 3/4	1 49/64	4	3/4	22220K	SNW-20	SDAF520	SR-20-17	LER75	81
SDAF22522	3 15/16	4 15/16	16 1/2	6 3/4	2 1/8	14 1/2	12 5/8	4	9 7/8	1 7/8	7 1/4	1 61/64	4	7/8	22222K	SNW-22	SDAF522	SR-22-19	LER93	94
SDAF22524	4 3/16	5 1/4	16 1/2	6 7/8	2 1/4	14 1/2	13 1/4	4 1/8	10 1/2	1 15/16	7 3/8	2 3/32	4	7/8	22224K	SNW-24	SDAF524	SR-24-20	LER113	137
SDAF22526	4 7/16	6	18 3/8	7 1/2	2 3/8	16	14 5/8	4 1/2	11 7/8	2 7/16	8	2 17/64	4	1	22226K	SNW-26	SDAF526	SR-26-0	LER117	159
SDAF22528	4 15/16	6	20 1/8	7 1/2	2 3/8	17 1/8	16	4 1/2	12 1/16	2 1/8	7 13/16	2 13/32	4	1 1/8	22228K	SNW-28	SDAF528	SR-28-0	LER122	189
SDAF22530	5 3/16	6 5/16	21 1/4	7 7/8	2 1/2	18 1/4	17	4 3/4	12 13/16	2 3/16	8 3/8	2 37/64	4	1 1/8	22230K	SNW-30	SDAF530	SR-30-0	LER125	225
SDAF22532	5 7/16	6 11/16	22	8 1/4	2 1/2	19 1/4	17 3/8	5	13 11/16	2 3/16	8 3/4	2 49/64	4	1 1/8	22232K	SNW-32	SDAF532	SR-32-0	LER130	300
SDAF22534	5 15/16	7 1/16	24 3/4	9	2 1/2	21 5/8	19 3/8	5 1/2	14 1/4	2 5/16	9 5/8	2 59/64	4	1 1/4	22234K	SNW-34	SDAF534	SR-34-0	LER140	310
SDAF22536	6 7/16	7 1/2	26 3/4	9 3/8	2 3/4	23 5/8	20 7/8	5 7/8	15 3/16	2 9/16	10	2 61/64	4	1 1/4	22236K	SNW-36	SDAF536	SR-36-30	LER148	350
SDAF22538	6 15/16	7 7/8	27 5/8	10	3	23 1/2	21 1/2	6 1/4	16 1/4	2 5/8	10 5/8	3 7/64	4	1 3/8	22238K	SNW-38	SDAF538	SR-38-32	LER224	420
SDAF22540	7 3/16	8 1/4	28 3/4	10 1/2	3 1/4	25	23	6 3/4	17 1/8	2 11/16	11 1/8	3 9/32	4	1 3/8	22240K	SNW-40	SDAF540	SR-40-34	LER228	545
SDAF22544	7 15/16	9 1/2	32	11 1/4	3 1/2	27 7/8	25 5/8	7 1/4	19 1/4	3 3/8	11 7/8	3 17/32	4	1 1/2	22244K	SNW-44	SDAF544	SR-44-36	LER236	665
SERIES SDAF226																				
SDAF22617	2 15/16	4 1/2	15 1/4	6	1 7/8	13 1/8	11 5/8	3 3/8	8 15/16	1 13/16	6 3/4	1 57/64	4	3/4	22317K	SNW-117	SDAF617	SR-20-17	LER59	94
SDAF22618	3 3/16	4 3/4	15 1/2	6 1/8	2	13 1/2	12	3 5/8	9 7/16	2	6 7/8	2 3/64	4	3/4	22318K	SNW-118	SDAF618	SR-21-18	LER69	137
SDAF22620	3 7/16	5 1/4	16 1/2	6 7/8	2 1/4	14 1/2	13 1/4	4 1/8	10 1/2	2 1/8	7 3/8	2 19/64	4	7/8	22320K	SNW-120	SDAF620	SR-24-20	LER75	159
SDAF22622	3 15/16	6	18 3/8	7 1/2	2 3/8	16	14 5/8	4 1/2	11 7/8	2 1/2	8	2 31/64	4	1	22322K	SNW-122	SDAF622	SR-0-22	LER93	189
SDAF22624	4 3/16	6 5/16	21 1/4	7 7/8	2 1/2	18 1/4	17	4 3/4	12 13/16	2 9/16	8 3/8	2 41/64	4	1 1/8	22324K	SNW-124	SDAF624	SR-0-24	LER113	225
SDAF22626	4 7/16	6 11/16	22	8 1/4	2 1/2	19 1/4	17 3/8	5	13 11/16	2 5/8	8 3/4	2 27/64	4	1 1/8	22326K	SNW-126	SDAF626	SR-0-26	LER117	300
SDAF22628	4 15/16	7 1/16	24 3/4	9	2 1/2	21 5/8	19 3/8	5 1/2	14 1/4	2 11/16	9 5/8	3 5/64	4	1 1/8	22328K	SNW-128	SDAF628	SR-0-28	LER122	310
SDAF22630	5 3/16	7 1/2	26 3/4	9 3/8	2 3/4	23 5/8	20 7/8	5 7/8	15 3/16	2 7/8	9 3/4	3 17/64	4	1 1/4	22330K	SNW-130	SDAF630	SR-36-30	LER125	395
SDAF22632	5 7/16	7 7/8	27 5/8	10	3	23 1/2	21 1/2	6 1/4	16 1/4	2 15/16	10 5/8	3 7/16	4	1 3/8	22332K	SNW-132	SDAF632	SR-38-32	LER211	420
SDAF22634	5 15/16	8 1/4	28 3/4	10 1/2	3 1/4	25	23	6 3/4	17 1/8	3 1/16	11 1/8	3 19/32	4	1 3/8	22334K	SNW-134	SDAF634	SR-40-34	LER215	525
SDAF22636	6 7/16	8 7/8	30 1/2	10 3/4	3 1/4	26 3/8	24 1/8	6 7/8	17 15/16	3 7/8	11 3/8	3 47/64	4	1 1/2	22336K	SNW-136	SDAF636	SR-0-36	LER220	645
SDAF22638	6 15/16	9 1/2	32	11 1/4	3 1/2	27 7/8	25 5/8	7 1/4	19 1/4	3 11/16	11 13/16	4 57/64	4	1 1/2	22338K	SNW-138	SDAF638	SR-44-38	LER224	705
SDAF22640	7 3/16	9 7/8	33 1/2	11 3/4	3 1/2	29 1/4	26 5/8	7 5/8	19 15/16	3 3/4	12 1/4	4 5/64	4	1 5/8	22340K	SNW-140	SDAF640	SR-0-40	LER228	825

[1] See page 120 for suggested shaft diameter S-1 tolerances.
[2] "Housing Only" includes: cap, base, cap bolts, triple ring seals and stabilizing rings as required.
[3] Stabilizing ring is used for fixed (FX) block; do not use for float (FL) mounting.
[4] Includes sleeve, Locknut and Lockwasher. Add shaft size to order.

Note: Speed ratings are found in dimension tables in the spherical roller bearing section.

B

INCH TAPERED BORE MOUNTING
SAF230K, SDAF230K SERIES

- Each assembly includes the housing cap and base, cap bolts, bearing, bearing adapter, Locknut and washer, stabilizing ring and triple ring seals.
- If only the pillow block is desired, use the numbers listed in column "Housing Only" column. These units include: cap, base, cap bolts, triple ring seals and stabilizing ring.
- Assembly and pillow blocks as described on this page constitute fixed units.
- To order float units, specify part number plus suffix "Float" or "FL".
- All assemblies shown are furnished in cast iron. If cast steel is desired, add the letter "S" to the alpha prefix (e.g., SAFS 23024).
- Please note that for applications SAF23048 and larger, the shaft size must be included in the part description when ordering (e.g., SAF23048-8 15/16).

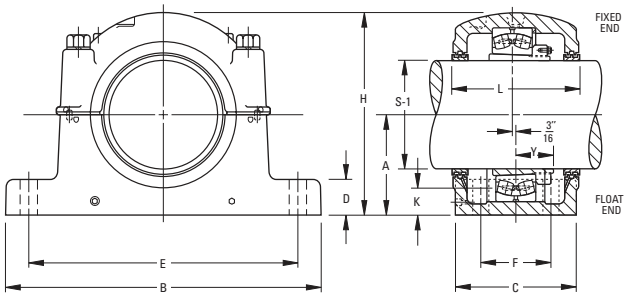

Two stabilizing rings are supplied with housings SAF048 through SAF056 and SDAF060K through SDAF076K. For fixed applications ***both rings must be used. Do not use stabilizing rings for float mounting.***

Pillow Block Assembly	Standard Shaft[1] Dia. S-1	A	B	C	D	E (Max.)	E (Min.)	F	H	K Oil Level	L	Y	4 Base Bolts Req'd. Size	Bearing Number	Adapter[4] Assembly Number	Housing[2] Only	Stabi-lizing[3] Ring	Triple Seal 2 Req'd	Ass'y Wt.
	in.	in.	in.	in.	in.	in.	in.	in.	in.	in.	in.	in.	in.						lbs.
SERIES SAF230K																			
SAF23024K	4 3/16	4 1/2	15 1/4	4 3/8	1 3/4	13 1/8	11 5/8	2 3/8	8 11/16	1 9/16	6	1 55/64	3/4	23024K	SNW-3024	SAF024K	SR-20-17	LER113	60
SAF23026K	4 7/16	4 15/16	16 1/2	4 3/4	2	14 1/2	12 5/8	2 3/4	9 9/16	1 11/16	6 3/8	2 1/32	3/4	23026K	SNW-3026	SAF026K	SR-22-19	LER117	76
SAF23028K	4 15/16	5 1/4	16 1/2	4 3/4	2 1/8	14 1/2	13 1/4	2 3/4	10 1/4	1 13/16	7 3/8	2 1/8	3/4	23028K	SNW-3028	SAF028K	SR- 0-20	LER122	90
SAF23030K	5 3/16	6	18 3/8	5 1/8	2 3/8	16	14 5/8	3 1/4	11 9/16	2 5/16	8	2 13/64	7/8	23030K	SNW-3030	SAF030K	SR- 0-21	LER125	125
SAF23032K	5 7/16	6	18 3/8	5 1/8	2 3/8	16	14 5/8	3 1/4	11 9/16	2 1/16	8	2 11/32	7/8	23032K	SNW-3032	SAF032K	SR- 0-22	LER130	132
SAF23034K	5 15/16	6	20 1/8	5 7/8	2 3/8	17 1/8	16	3 3/8	11 3/4	1 3/4	7 3/4	2 33/64	1	23034K	SNW-3034	SAF034K	SR- 0-24	LER140	154
SAF23036K	6 7/16	6 11/16	22	6 1/4	2 5/8	19 1/4	17 3/8	3 3/4	13 5/16	2 3/16	8 3/4	2 11/16	1	23036K	SNW-3036	SAF036K	SR- 0-26	LER148	212
SAF23038K	6 15/16	6 11/16	22	6 1/4	2 5/8	19 1/4	17 3/8	3 3/4	13 5/16	1 15/16	8 3/4	2 47/64	1	23038K	SNW-3038	SAF038K	SR-32- 0	LER155	220
SAF23040K	7 3/16	7 1/16	24 3/4	6 3/4	2 3/4	21 5/8	19 3/8	4 1/4	14 9/16	2 13/16	9 3/8	2 15/16	1	23040K	SNW-3040	SAF040K	SR-34- 0	LER159	295
SAF23044K	7 15/16	7 7/8	28	7 1/2	3 1/8	24 3/8	21 5/8	4 1/2	15 11/16	2 3/8	10 3/4	3 5/32	1 1/4	23044K	SNW-3044	SAF044K	SR-38-32	LER167	370
SAF23048K-8 7/16	8 7/16	8 1/4	29 1/2	8	3 3/8	25	22 1/2	5	17 3/16	2 1/4	11 1/8	3 17/32	1 1/4	23048K	SNP-3048-8 7/16	SAF048K-8 7/16	A8897	LER526	430
SAF23048K-8 1/2	8 1/2	8 1/4	29 1/2	8	3 3/8	25	22 1/2	5	17 3/16	2 1/4	11 1/8	3 17/32	1 1/4	23048K	SNP-3048-8 1/2	SAF048K-8 1/2	A8897	LER527	428
SAF23048K-8 15/16	8 15/16	8 1/4	29 1/2	8	3 3/8	25	22 1/2	5	17 3/16	2 1/4	11 1/8	3 17/32	1 1/4	23048K	SNP-3048-8 15/16	SAF048K-8 15/16	A8897	LER529	422
SAF23048K-9	9	8 1/4	29 1/2	8	3 3/8	25	22 1/2	5	17 3/16	2 1/4	11 1/8	3 17/32	1 1/4	23048K	SNP-3048-9	SAF048K-9	A8897	LER530	420
SAF23052K-9 7/16	9 7/16	9 1/2	32 3/4	8 3/4	3 3/4	27 7/8	24 3/4	5 1/4	19 7/16	2 15/16	11 7/8	3 53/64	1 1/2	23052K	SNP-3052-9 7/16	SAF052K-9 7/16	A8898	LER178-1	587
SAF23052K-9 1/2	9 1/2	9 1/2	32 3/4	8 3/4	3 3/4	27 7/8	24 3/4	5 1/4	19 7/16	2 15/16	11 7/8	3 53/64	1 1/2	23052K	SNP-3052-9 1/2	SAF052K-9 1/2	A8898	LER178	585
SAF23056K-9 15/16	9 15/16	9 7/8	34 1/4	9	4	29 1/2	26 1/4	5 1/2	20 3/16	2 15/16	12 1/16	3 61/64	1 1/2	23056K	SNP-3056-9 15/16	SAF056K-9 15/16	A8819	ER751	640
SAF23056K-10	10	9 7/8	34 1/4	9	4	29 1/2	26 1/4	5 1/2	20 3/16	2 15/16	12 1/16	3 61/64	1 1/2	23056K	SNP-3056-10	SAF056K-10	A8819	ER705	635
SAF23056K-10 7/16	10 7/16	9 7/8	34 1/4	9	4	29 1/2	26 1/4	5 1/2	20 3/16	2 15/16	12 1/16	3 61/64	1 1/2	23056K	SNP-3056-10 7/16	SAF056K-10 7/16	A8819	ER745	625
SAF23056K-10 1/2	10 1/2	9 7/8	34 1/4	9	4	29 1/2	26 1/4	5 1/2	20 3/16	2 15/16	12 1/16	3 61/64	1 1/2	23056K	SNP-3056-10 1/2	SAF056K-10 1/2	A8819	ER710	620
SERIES SDAF230K																			
SDAF23060K-10 15/16	10 15/16	12	38 1/4	14 3/4	3 1/2	33 1/2	32 3/4	9	23 7/16	4 7/16	15 1/2	4 9/32	1 5/8	23060K	SNP-3060-10 15/16	SDAF060K-10 15/16	A8967	ER858	1175
SDAF23060K-11	11	12	38 1/4	14 3/4	3 1/2	33 1/2	32 3/4	9	23 7/16	4 7/16	15 1/2	4 9/32	1 5/8	23060K	SNP-3060-11	SDAF060K-11	A8967	ER825	1174
SDAF23064K-11 7/16	11 7/16	12	38 1/4	14 3/4	3 1/2	33 1/2	32 3/4	9	23 7/16	4 1/16	15 1/2	4 7/16	1 5/8	23064K	SNP-3064-11 7/16	SDAF064K-11 7/16	A8968	ER861	1275
SDAF23064K-11 1/2	11 1/2	12	38 1/4	14 3/4	3 1/2	33 1/2	32 3/4	9	23 7/16	4 1/16	15 1/2	4 7/16	1 5/8	23064K	SNP-3064-11 1/2	SDAF064K-11 1/2	A8968	ER832	1274
SDAF23064K-11 15/16	11 15/16	12	38 1/4	14 3/4	3 1/2	33 1/2	32 3/4	9	23 7/16	4 1/16	15 1/2	4 7/16	1 5/8	23064K	SNP-3064-11 15/16	SDAF064K-11 15/16	A8968	ER859	1269
SDAF23064K-12	12	12	38 1/4	14 3/4	3 1/2	33 1/2	32 3/4	9	23 7/16	4 1/16	15 1/2	4 7/16	1 5/8	23064K	SNP-3064-12	SDAF064K-12	A8968	ER818	1268
SDAF23068K-12 7/16	12 7/16	12	39	15 1/4	4 3/16	33 1/2	32	10	24	3 7/16	15 3/4	4 13/16	1 7/8	23068K	SNP-3068-12 7/16	SDAF068K-12 7/16	A8969	ER865	1553
SDAF23068K-12 1/2	12 1/2	12	39	15 1/4	4 3/16	33 1/2	32	10	24	3 7/16	15 3/4	4 13/16	1 7/8	23068K	SNP-3068-12 1/2	SDAF068K-12 1/2	A8969	ER866	1552
SDAF23072K-12 15/16	12 15/16	12 13/16	41 3/4	15 3/4	4 1/2	36 1/2	35	10 1/2	26	3 7/8	16 1/4	4 53/64	1 7/8	23072K	SNP-3072-12 15/16	SDAF072K-12 15/16	A8970	ER869	1632
SDAF23072K-13	13	12 13/16	41 3/4	15 3/4	4 1/2	36 1/2	35	10 1/2	26	3 7/8	16 1/4	4 53/64	1 7/8	23072K	SNP-3072-13	SDAF072K-13	A8970	ER846	1630
SDAF23072K-13 7/16	13 7/16	12 13/16	41 3/4	15 3/4	4 1/2	36 1/2	35	10 1/2	26	3 7/8	16 1/4	4 53/64	1 7/8	23072K	SNP-3072-13 7/16	SDAF072K-13 7/16	A8970	ER872	1614
SDAF23072K-13 1/2	13 1/2	12 13/16	41 3/4	15 3/4	4 1/2	36 1/2	35	10 1/2	26	3 7/8	16 1/4	4 53/64	1 7/8	23072K	SNP-3072-13 1/2	SDAF072K-13 1/2	A8970	ER823	1610
SDAF23076K-13 15/16	13 15/16	12 13/16	41 3/4	15 3/4	4 1/2	36 1/2	35	10 1/2	26	3 7/16	16 1/4	5 1/16	1 7/8	23076K	SNP-3076-13 15/16	SDAF076K-13 15/16	A8971	ER875	1687
SDAF23076K-14	14	12 13/16	41 3/4	15 3/4	4 1/2	36 1/2	35	10 1/2	26	3 7/16	16 1/4	5 1/16	1 7/8	23076K	SNP-3076-14	SDAF076K-14	A8971	ER876	1685
SDAF23080K-15	15	14 1/2	46	17 1/8	5 1/4	40 3/4	39 1/4	11	29	4 7/16	17 5/8	5 17/32	4,2	23080K	SNP-3080-15	SDAF080K-15	1A8974	ER847	2300
SDAF23084K-15 3/4	15 3/4	14 1/2	46	17 7/8	5 1/4	40 3/4	39 1/4	11	29	4 1/16	17 5/8	5 9/16	4,2	23087K	SNP-3084-15 3/4	SDAF084K-15 3/4	1A8978	ER885	2300
SDAF23088K-16 1/2	16 1/2	15 1/2	48 3/4	18 3/4	5 1/2	43 1/2	41 3/4	12 1/4	30 1/2	4 1/2	19 1/4	5 3/4	4,2 1/4	23088AK	SNP-3088-16 1/2	SDAF3088K-16 1/2	2A8979	ER958	2550
SDAF23092K-17	17	15 1/2	48 3/4	18 3/4	5 1/2	43 1/2	41 3/4	12 1/4	30 1/2	4	19 1/4	5 7/8	4,2 1/4	23082K	SNP-3092-17	SDAF3092K-17	2A8980	ER838	2850
SDAF23096K-18	18	17	53	21	5 1/2	46 1/8	44 3/8	14 1/2	33 3/4	5 1/8	21 3/4	5 29/32	4,2 1/4	23096K	SNP-3096-18	SDAF3096K-18	2A8984	ER888	4250
SDAF230/530K-18 1/2	18 1/2	17	53	21	5 1/2	46 1/8	44 3/8	14 1/2	33 3/4	4 3/4	21 3/4	6 1/2	4,2 1/4	230/500K	SNP-30-500-18 1/2	SDAF30-500K-18 1/2	2A8976	ER978	4350
SDAF230/530K-19 1/2	19 1/2	18	54 1/4	21 5/8	5 3/4	48 7/8	47 1/8	15	35 3/4	4 13/16	22 1/4	6 27/32	4,2 1/2	230/530/K	SNP-30-530-19 1/2	SDAF30-530K-19 1/2		ER926	5200

[1] See page 120 for suggested shaft diameter S-1 tolerances.

[2] "Housing Only" includes: cap, base, cap bolts, triple ring seals and stabilizing rings as required.

[3] Stabilizing ring is used for fixed (FX) block; do not use for float (FL) mounting.

[4] Includes sleeve, Locknut, Lockwasher or Lockplate. Add shaft size to order.

Note: Speed ratings are found in dimension tables in the spherical roller bearing section.

B

INCH TAPERED BORE MOUNTING SDAF231K AND SDAF232K SERIES

- Each assembly includes the housing cap and base, cap bolts, bearing, bearing adapter, Locknut and washer, stabilizing ring and triple ring seals.
- To order pillow block housing only, use the numbers listed in the "Housing Only" column. These units include: cap, base, cap bolts, triple ring seals and stabilizing ring.
- Assembly and pillow blocks described on this page constitute fixed units.
- To order float units, specify part number plus suffix "Float" or "FL".
- All assemblies shown are furnished in cast iron. If cast steel is desired, add the letter "S" to the alpha prefix (e.g., SDAFS 23152K).

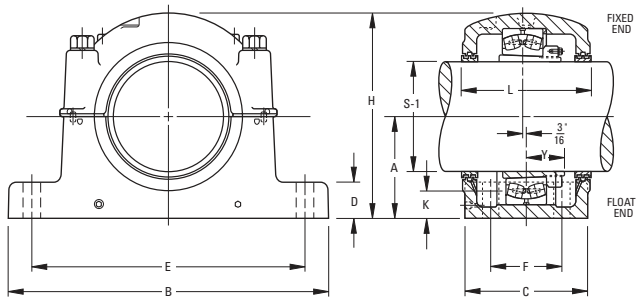

Pillow Block Assembly	Standard Shaft[1] Dia. S-1	A	B	C	D	E (Max.)	E (Min.)	F	H	K Oil Level	L	4 Base Bolts Req'd. Size	Bearing Number	Adapter[4] Assembly Number	Housing[2] Only	Stabi-lizing[3] Ring 2 Req'd	Triple Seal 2 Req'd	Ass'y Wt.
	in.	in.	in.	in.	in.	in.	in.	in.	in.	in.	in.	in.						lbs.
SERIES SDAF231K																		
SDAF23152K	9 7/16	10 1/4	35	13 1/8	3 3/4	30 1/2	29	8 3/4	20 7/8	3 3/8	13 3/4	1 5/8	23152K	SNP-3152	SDAF3152K	A5679	ER891	1050
SDAF23156K	10 7/16	12	38 1/4	14 3/4	3 3/8	33 1/2	32 3/4	9	23 7/16	4 3/4	15 3/8	1 5/8	23156K	SNP-3156	SDAF3156K	A8967	ER973	1300
SDAF23160K	10 15/16	12	38 1/4	14 3/4	3 3/8	33 1/2	32 3/4	9	23 7/16	4 1/8	15 3/8	1 5/8	23160K	SNP-3160	SDAF3160K	A8975	ER858	1350
SDAF23164K	11 15/16	12 13/16	41 3/4	15 3/4	4 1/2	36 1/2	35	10 1/2	25 3/4	4 3/8	16 1/4	1 7/8	23164K	SNP-3164	SDAF3164K	A8970	ER942	1900
SDAF23168K	12 7/16	14	43 3/4	17 3/4	5	38 1/4	36 3/4	10 3/4	27 7/8	4 15/16	18 1/4	2	23168K	SNP-3168	SDAF3168K	A8977	ER975	2550
SDAF23172K	13 7/16	14 1/2	46	17 1/8	5 1/4	40 3/4	39 1/4	11	28 7/8	5	17 3/4	2	23172K	SNP-3172	SDAF3172K	A8974	ER872	2600
SDAF23176K	13 15/16	14 1/2	46	17 1/8	5 1/4	40 3/4	39 1/4	11	28 7/8	4 5/8	17 3/4	2	23176K	SNP-3176	SDAF3176K	A8978	ER875	2600
SDAF23180K	15	15 1/2	48 3/4	18 3/4	5 1/2	43 1/2	41 3/4	12 1/4	30 1/2	5 1/8	19 1/4	2 1/4	23180K	SNP-3180	SDAF3180K	A8979	ER847	3000
SDAF23184K	15 3/4	17	52	21	5 1/2	46 1/8	44 3/8	14 1/2	33 3/4	6	21 3/4	2 1/4	23184K	SNP-3184	SDAF3184K	A8984	ER914	4400
SDAF23188K	16 1/2	17	52	21	5 1/2	46 1/8	44 3/8	14 1/2	33 3/4	5 9/16	21 3/4	2 1/4	23188K	SNP-3188	SDAF3188K	A8976	ER947	4600
SDAF23192K	17	18	54 1/4	21 5/8	5 3/4	48 7/8	47 1/8	15	35 3/4	6	22 1/4	2 1/2	23192K	SNP-3192	SDAF3192K	A8990	ER838	5100
SDAF23196K	18	18	54 1/4	21 5/8	5 3/4	48 7/8	47 1/8	15	35 3/4	5 1/2	22 1/4	2 1/2	23196K	SNP-3196	SDAF3196K	A8998	ER954	5200
SERIES SDAF232K																		
SDAF23248K	8 15/16	10 1/4	35	13 1/8	3 3/4	30 1/2	29	8 3/4	20 7/8	3 9/16	13 3/4	1 5/8	23248K	SNP-148	SDAF3248K	A5679	ER939	1100
SDAF23252K	9 7/16	12	38 1/4	14 3/4	3 3/8	33 1/2	32 3/4	9	23 7/16	4 3/4	15 3/8	1 5/8	23252K	SNP-152	SDAF3252K	A8968	ER891	1400
SDAF23256K	10 7/16	12	38 1/4	14 3/4	3 3/8	33 1/2	32 3/4	9	23 7/16	4 3/8	15 3/8	1 5/8	23256K	SNP-3256	SDAF3256K	A8975	ER973	1400
SDAF23260K	10 15/16	12 13/16	41 3/4	15 3/4	4 1/2	36 1/2	35	10 1/2	25 3/4	4 1/2	16 1/4	1 7/8	23260K	SNP-3260	SDAF3260K	A8970	ER941	1900
SDAF23264K	11 15/16	14	43 3/4	17 3/4	5	38 1/4	36 3/4	10 3/4	27 7/8	5 1/8	18 1/4	2	23264K	SNP-3264	SDAF3264K	A8977	ER942	2600
SDAF23268K	12 7/16	14 1/2	46	17 1/8	5 1/4	40 3/4	39 1/4	11	28 7/8	5	17 3/4	2	23268K	SNP-3268	SDAF3268K	A8978	ER944	2700
SDAF23272K	13 7/16	15 1/2	48 3/4	18 3/4	5 1/2	43 1/2	41 3/4	12 1/4	30 1/2	5 1/2	19 1/4	2 1/4	23272K	SNP-3272	SDAF3272K	A8979	ER872	3050
SDAF23276K	13 15/16	15 1/2	48 3/4	18 3/4	5 1/2	43 1/2	41 3/4	12 1/4	30 1/2	4 3/8	19 1/4	2 1/4	23276K	SNP-3276	SDAF3276K	A8980	ER875	3000
SDAF23280K	14 15/16	17	52	21	5 1/2	46 1/8	44 3/8	14 1/2	33 3/4	6	21 3/4	2 1/4	23280K	SNP-3280	SDAF3280K	A8976	ER976	4650
SDAF23284K	15 3/4	18	54 1/4	21 5/8	5 3/4	48 7/8	47 1/8	15	35 3/4	6 3/8	22 1/4	2 1/2	23284K	SNP-3284	SDAF3284K	A8990	ER951	4900
SDAF23288K	16 1/2	18	54 1/4	21 5/8	5 3/4	48 7/8	47 1/8	15	35 3/4	5 7/8	22 1/4	2 1/2	23288K	SNP-3288	SDAF3288K	A8988	ER952	5200

(1) See page 120 for suggested shaft diameter S-1 tolerances.

(2) "Housing Only" includes: cap, base, cap bolts, triple ring seals and stabilizing rings as required. Add shaft size to order.

(3) Stabilizing ring is used for fixed (FX) block; do not use for float (FL) mounting.

(4) Includes sleeve, Locknut and Lockwasher. Add shaft size to order.

Note: Speed ratings are found in dimension tables in the spherical roller bearing section.

B

INCH STRAIGHT BORE MOUNTING SAF222 AND SAF223 SERIES

- Each assembly includes the housing cap and base, cap bolts, bearing, Locknut and washer, stabilizing ring and triple ring seals.
- To order pillow block housing only, use the numbers listed in "Housing Only" column. These units include: cap, base, cap bolts, triple ring seals and stabilizing ring.
- Assembly and pillow blocks described on this page constitute fixed units.
- To order float units, specify part number plus suffix "Float" or "FL".
- All assemblies shown are furnished in cast iron. If cast steel is desired, add the letter "S" to the alpha prefix (e.g., SAFS 22217).
- Four-bolt bases are standard on all assemblies, except as noted.

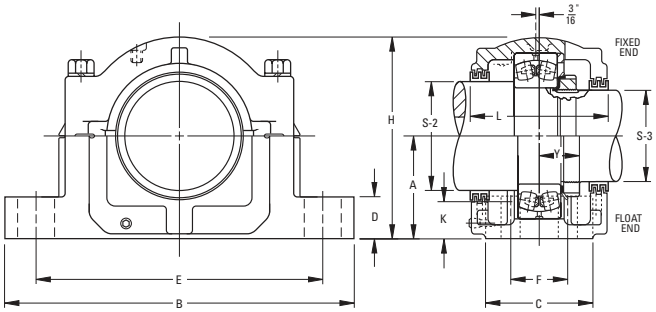

Pillow Block Assembly	Standard Shaft[1] Dia. S-2	S-3	A	B	C	D	E (Max.)	E (Min.)	F	H	K Oil Level	L	Y	Base Bolts Required No.	Size	Bearing Number	Lock Nut	Lock Washer	Housing[2] Only	Stabil-lizing[3] Ring	Triple Seal 1 Req'd S-2	Triple Seal 1 Req'd S-3	Ass'y Wt.
	in.	in.	in.	in.	in.	in.	in.	in.	in.	in.	in.	in.	in.		in.								lbs.
SERIES SAF222																							
SAF22217	3 15/16	3 3/16	3 3/4	13	3 1/2	1 1/4	11	9 7/8	—	7 1/4	1 7/16	4 15/16	1 27/64	2	3/4	22217	AN17	W17	SAF217	SR-17-14	LER89	LER63	43
FSAF22217	3 15/16	3 3/16	3 3/4	13	3 1/2	1 1/4	11	9 7/8	2 1/8	7 1/4	1 7/16	4 15/16	1 27/64	4	5/8	22217	AN17	W17	FSAF217	SR-17-14	LER89	LER63	43
SAF22218	4 1/8	3 3/8	4	13 3/4	3 7/8	1 1/2	11 5/8	10 3/8	—	7 3/4	1 17/32	6 1/4	1 37/64	2	3/4	22218	AN18	W18	SAF218	SR-18-15	LER96	LER72	50
FSAF22218	4 1/8	3 3/8	4	13 3/4	3 7/8	1 1/2	11 5/8	10 3/8	2 1/8	7 3/4	1 17/32	6 1/4	1 37/64	4	5/8	22218	AN18	W18	FSAF218	SR-18-15	LER96	LER72	50
SAF22220	4 1/2	3 13/16	4 1/2	15 1/4	4 3/8	1 3/4	13 1/8	11 5/8	—	8 11/16	1 3/4	6	1 49/64	2	7/8	22220	AN20	W20	SAF220	SR-20-17	LER118	LER106	71
FSAF22220	4 1/2	3 13/16	4 1/2	15 1/4	4 3/8	1 3/4	13 1/8	11 5/8	2 3/8	8 11/16	1 3/4	6	1 49/64	4	3/4	22220	AN20	W20	FSAF220	SR-20-17	LER118	LER106	71
SAF22222	4 7/8	4 3/16	4 15/16	16 1/2	4 3/4	2	14 1/2	12 5/8	2 3/4	9 9/16	1 7/8	6 3/8	1 61/64	4	3/4	22222	AN22	W22	SAF222	SR-22-19	LER121	LER113	81
SAF22224	5 5/16	4 9/16	5 1/4	16 1/2	4 3/4	2 1/8	14 1/2	13 1/4	2 3/4	10 1/4	1 15/16	7 3/8	2 3/32	4	3/4	22224	AN24	W24	SAF224	SR-24-20	LER127	LER119	90
SAF22226	5 7/8	4 15/16	6	18 3/8	5 1/8	2 3/8	16	14 5/8	3 1/4	11 9/16	2 7/16	8	2 17/64	4	7/8	22226	AN26	W26	SAF226	SR-26-0	LER136	LER122	127
SAF22228	6 1/4	5 5/16	6	20 1/8	5 7/8	2 3/8	17 1/8	16	3 3/8	11 3/4	2 1/8	7 3/4	2 13/32	4	1	22228	AN28	W28	SAF228	SR-28-0	LER144	LER127	149
SAF22230	6 5/8	5 3/4	6 5/16	21 1/4	6 1/4	2 1/2	18 1/4	17	3 3/4	12 1/2	2 3/16	8 3/8	2 37/64	4	1	22230	AN30	W30	SAF230	SR-30-0	LER151	LER134	175
SAF22232	7	6 1/16	6 11/16	22	6 1/4	2 5/8	19 1/4	17 3/8	3 3/4	13 5/16	2 3/16	8 3/4	2 49/64	4	1	22232	AN32	W32	SAF232	SR-32-0	LER156	LER142	210
SAF22234	7 7/16	6 7/16	7 1/16	24 3/4	6 3/4	2 3/4	21 5/8	19 3/8	4 1/4	14 9/16	2 5/16	9 3/8	2 59/64	4	1	22234	AN34	W34	SAF234	SR-34-0	LER161	LER148	280
SAF22236	7 13/16	6 7/8	7 1/2	26 3/4	7 1/8	3	23 5/8	20 7/8	4 5/8	15 1/2	2 9/16	9 11/16	2 61/64	4	1	22236	AN36	W36	SAF236	SR-36-0	LER165	LER154	305
SAF22238	8 3/8	7 1/4	7 7/8	28	7 1/2	3 1/8	24 3/8	21 5/8	4 1/2	15 11/16	2 5/8	10 3/4	3 7/64	4	1 1/4	22238	AN38	W38	SAF238	SR-38-32	LER171	LER160	350
SAF22240	8 3/4	7 5/8	8 1/4	29 1/2	8	3 3/8	25	22 1/2	5	17 3/16	2 11/16	10 13/16	3 9/32	4	1 1/4	22240	AN40	W40	SAF240	SR-40-34	LER175	LER164	420
SAF22244	9 9/16	8 5/16	9 1/2	32 3/4	8 3/4	3 3/4	27 7/8	24 3/4	5 1/4	19 5/8	3 3/8	11 1/2	3 17/32	4	1 1/2	22244	N44	W44	SAF244	SR-44-38	LER179	LER170	590
SERIES SAF223																							
SAF22317	3 15/16	3 3/16	4 1/2	15 1/4	4 3/8	1 3/4	13 1/8	11 5/8	–	8 11/16	1 13/16	6	1 57/64	2	7/8	22317	AN17	W17	SAF317	SR-20-17	LER109	LER188	80
FSAF22317	3 15/16	3 3/16	4 1/2	15 1/4	4 3/8	1 3/4	13 1/8	11 5/8	2 3/8	8 11/16	1 13/16	6	1 57/64	4	3/4	22317	AN17	W17	FSAF317	SR-20-17	LER109	LER188	80
SAF22318	4 1/8	3 3/8	4 3/4	15 1/2	4 3/8	2	13 1/2	12	2 1/4	9 3/16	2	7	2 3/64	4	3/4	22318	AN18	W18	FSAF318	SR-21-18	LER112	LER191	92
SAF22320	4 1/2	3 13/16	5 1/4	16 1/2	4 3/4	2 1/8	14 1/2	13 1/4	2 3/4	10 1/4	2 1/8	7 3/8	2 19/64	4	3/4	22320	AN20	W20	SAF320	SR-24-20	LER118	LER106	109
SAF22322	4 7/8	4 3/16	6	18 3/8	5 1/8	2 3/8	16	14 5/8	3 1/4	11 9/16	2 1/2	8	2 31/64	4	7/8	22322	AN22	W22	SAF322	SR-0-22	LER121	LER113	145
SAF22324	5 5/16	4 9/16	6 5/16	21 1/4	6 1/4	2 1/2	18 1/4	17	3 3/4	12 1/2	2 9/16	8 3/8	2 41/64	4	1	22324	AN24	W24	SAF324	SR-0-24	LER127	LER119	195
SAF22326	5 7/8	4 15/16	6 11/16	22	6 1/4	2 5/8	19 1/4	17 3/8	3 3/4	13 15/16	2 5/8	8 3/4	2 27/32	4	1	22326	AN26	W26	SAF326	SR-0-26	LER136	LER122	235
SAF22328	6 1/4	5 5/16	7 1/16	24 3/4	6 3/4	2 3/4	21 5/8	19 3/8	4 1/4	14 9/16	2 11/16	9 3/8	3 5/64	4	1	22328	AN28	W28	SAF328	SR-0-28	LER144	LER127	300
SAF22330	6 5/8	5 3/4	7 1/2	26 3/4	7 1/8	3	23 5/8	20 7/8	4 5/8	15 1/2	2 7/8	9 11/16	3 17/64	4	1	22330	AN30	W30	SAF330	SR-36-30	LER151	LER134	335
SAF22332	7	6 1/16	7 7/8	28	7 1/2	3 1/8	24 3/8	21 5/8	4 1/2	15 11/16	2 15/16	10 3/4	3 7/16	4	1 1/4	22332	AN32	W32	SAF332	SR-38-32	LER156	LER142	405
SAF22334	7 7/16	6 7/16	8 1/4	29 1/2	8	3 3/8	25	22 1/2	5	17 3/16	3 1/16	10 13/16	3 19/32	4	1 1/4	22334	AN34	W34	SAF334	SR-40-34	LER161	LER148	465
SAF22336	7 13/16	6 7/8	8 7/8	31 1/4	8 1/4	3 1/2	26 5/8	24	5 1/4	18 1/2	3 3/8	11 1/4	3 47/64	4	1 1/4	22336	AN36	W36	SAF336	SR-0-36	LER165	LER154	525
SAF22338	8 3/8	7 1/4	9 1/2	32 3/4	8 3/4	3 3/4	27 7/8	24 3/4	5 1/4	19 5/8	3 11/16	11 1/2	3 57/64	4	1 1/2	22338	AN38	W38	SAF338	SR-44-38	LER171	LER160	635
SAF22340	8 3/4	7 5/8	9 7/8	34 1/4	9	4	29 1/2	26 1/4	5 1/2	20 3/16	3 3/4	12 1/4	4 5/64	4	1 1/2	22340	AN40	W40	SAF340	SR-0-40	LER175	LER164	700

[1] See page 120 for suggested shaft diameter S-2, S-3 tolerances.
[2] "Housing Only" includes: cap, base, cap bolts, triple ring seals and stabilizing rings as required.
[3] Stabilizing ring is used for fixed (FX) block; do not use for float (FL) mounting.

Note: Speed ratings are found in dimension tables in the spherical roller bearing section.

B

INCH STRAIGHT BORE MOUNTING SDAF222 AND SDAF223 SERIES

- Each assembly includes the housing cap and base, cap bolts, bearing, Locknut and washer, stabilizing ring, and triple ring seals.
- To order pillow block housing only, use the numbers listed in the "Housing Only" column. These units include: cap, base, cap bolts, triple ring seals and stabilizing ring.
- Assembly and pillow blocks described on this page constitute fixed units.
- To order float units, specify part number plus suffix "Float" or "FL".
- All assemblies shown are furnished in cast iron. If cast steel is desired, add the letter "S" to the alpha prefix (e.g., SDAS 22220).

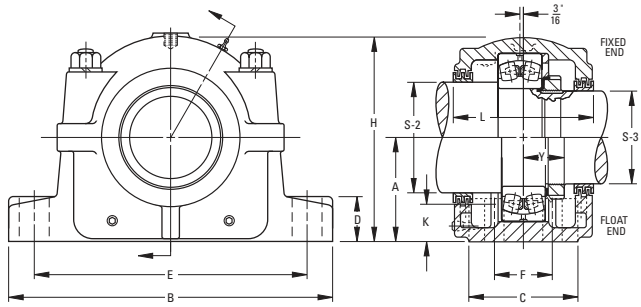

Pillow Block Assembly	Standard Shaft[1] Dia. S-2	Standard Shaft[1] Dia. S-3	A	B	C	D	E (Max.)	E (Min.)	F	H	K Oil Level	L	Y	Base Bolts Required No.	Base Bolts Required Size	Bearing Number	Lock Nut	Lock Washer	Housing[2] Only	Stabilizing[3] Ring 1 Req'd	Triple Seal 1 Req'd S-2	Triple Seal 1 Req'd S-3	Ass'y Wt.
	in.	in.	in.	in.	in.	in.	in.	in.	in.	in.	in.	in.	in.		in.								lbs.
SERIES SDAF222																							
SDAF22220	4 1/2	3 13/16	4 1/2	15 1/4	6	1 7/8	13 1/8	11 5/8	3 3/8	8 15/16	1 3/4	6 3/4	1 49/64	4	3/4	22220	AN20	W20	SDAF220	SR-20-17	LER118	LER106	81
SDAF22222	4 7/8	4 3/16	4 15/16	16 1/2	6 3/4	2 1/8	14 1/2	12 5/8	4	9 7/8	1 7/8	7 1/4	1 61/64	4	7/8	22222	AN22	W22	SDAF222	SR-22-19	LER121	LER113	109
SDAF22224	5 5/16	4 9/16	5 1/4	16 1/2	6 7/8	2 1/4	14 1/2	13 1/4	4 1/8	10 1/2	1 15/16	7 3/8	2 3/32	4	7/8	22224	AN24	W24	SDAF224	SR-24-20	LER127	LER119	113
SDAF22226	5 7/8	4 15/16	6	18 3/8	7 1/2	2 3/8	16	14 5/8	4 1/2	11 7/8	2 7/16	8	2 17/64	4	1	22226	AN26	W26	SDAF226	SR-26-0	LER136	LER122	151
SDAF22228	6 1/4	5 5/16	6	20 1/8	7 1/2	2 3/8	17 1/8	16	4 1/2	12 1/16	2 1/8	7 13/16	2 13/32	4	1	22228	AN28	W28	SDAF228	SR-28-0	LER144	LER127	175
SDAF22230	6 5/8	5 3/4	6 5/16	21 1/4	7 7/8	2 1/2	18 1/4	17	4 3/4	12 13/16	2 3/16	8 3/8	2 37/64	4	1 1/8	22230	AN30	W30	SDAF230	SR-30-0	LER151	LER134	201
SDAF22232	7	6 1/16	6 11/16	22	8 1/4	2 1/2	19 1/4	17 3/8	5	13 11/16	2 3/16	8 3/4	2 49/64	4	1 1/8	22232	AN32	W32	SDAF232	SR-32-0	LER156	LER142	245
SDAF22234	7 7/16	6 7/16	7 1/16	24 3/4	9	2 1/2	21 5/8	19 3/8	5 1/2	14 1/4	2 5/16	9 5/8	2 59/64	4	1 1/4	22234	AN34	W34	SDAF234	SR-34-0	LER161	LER148	300
SDAF22236	7 13/16	6 7/8	7 1/2	26 3/4	9 3/8	2 3/4	23 5/8	20 7/8	5 7/8	15 3/16	2 9/16	10	2 61/64	4	1 1/4	22236	AN36	W36	SDAF236	SR-36-30	LER165	LER154	335
SDAF22238	8 3/8	7 1/4	7 7/8	27 5/8	10	3	23 1/2	21 1/2	6 1/4	16 1/4	2 5/8	10 5/8	3 7/64	4	1 3/8	22238	AN38	W38	SDAF238	SR-38-32	LER240	LER229	405
SDAF22240	8 3/4	7 5/8	8 1/4	28 3/4	10 1/2	3 1/4	25	23	6 3/4	17 1/8	2 11/16	11 1/8	3 9/32	4	1 3/8	22240	AN40	W40	SDAF240	SR-40-34	LER244	LER233	465
SDAF22244	9 9/16	8 5/16	9 1/2	32	11 1/4	3 1/2	27 7/8	25 5/8	7 1/4	19 1/4	3 3/8	11 7/8	3 17/32	4	1 1/2	22244	N44	W44	SDAF240	SR-44-38	LER248	LER239	650
SERIES SDAF223																							
SDAF22317	3 15/16	3 3/16	4 1/2	15 1/4	6	1 7/8	13 1/8	11 5/8	3 3/8	8 15/16	1 3/16	6 3/4	1 57/64	4	3/4	22317	AN17	W17	SDAF317	SR-20-17	LER109	LER188	80
SDAF22318	4 1/8	3 3/8	4 3/4	15 1/2	6 1/8	2	13 1/2	12	3 5/8	9 7/16	2	6 7/8	2 3/64	4	3/4	22318	AN18	W18	SDAF318	SR-21-18	LER112	LER191	92
SDAF22320	4 1/2	3 13/16	5 1/4	16 1/2	6 7/8	2 1/4	14 1/2	13 1/4	4 1/8	10 1/2	2 1/8	7 3/8	2 19/64	4	7/8	22320	AN20	W20	SDAF320	SR-24-20	LER118	LER106	109
SDAF22322	4 7/8	4 3/16	6	18 3/8	7 1/2	2 3/8	16	14 5/8	4 1/2	11 7/8	2 1/2	8	2 31/64	4	1	22322	AN22	W22	SDAF322	SR-0-22	LER121	LER113	145
SDAF22324	5 5/16	4 9/16	6 5/16	21 1/4	7 7/8	2 1/2	18 1/4	17	4 3/4	12 13/16	2 9/16	8 3/8	2 41/64	4	1 1/8	22324	AN24	W24	SDAF324	SR-0-24	LER127	LER119	195
SDAF22326	5 7/8	4 15/16	6 11/16	22	8 1/4	2 1/2	19 1/4	17 3/8	5	13 11/16	2 5/8	8 3/4	2 27/64	4	1 1/8	22326	AN26	W26	SDAF326	SR-0-26	LER136	LER122	280
SDAF22328	6 1/4	5 5/16	7 1/16	24 3/4	9	2 1/2	21 5/8	19 3/8	5 1/2	14 1/4	2 11/16	9 5/8	3 5/64	4	1 1/4	22328	AN28	W28	SDAF328	SR-0-28	LER144	LER127	305
SDAF22330	6 5/8	5 3/4	7 1/2	26 3/4	9 3/8	2 3/4	23 5/8	20 7/8	5 7/8	15 3/16	2 7/8	9 3/4	3 17/64	4	1 1/4	22330	AN30	W30	SDAF330	SR-36-30	LER151	LER134	375
SDAF22332	7	6 1/16	7 7/8	27 5/8	10	3	23 1/2	21 1/2	6 1/4	16 1/4	2 15/16	10 5/8	3 7/16	4	1 3/8	22332	AN32	W32	SDAF332	SR-38-32	LER225	LER217	445
SDAF22334	7 7/16	6 7/16	8 1/4	28 3/4	10 1/2	3 1/4	25	23	6 3/4	17 1/8	3 1/16	11 1/8	3 19/32	4	1 3/8	22334	AN34	W34	SDAF334	SR-40-34	LER230	LER220	525
SDAF22336	7 13/16	6 7/8	8 7/8	30 1/2	10 3/4	3 1/4	26 3/8	24 1/8	6 7/8	17 15/16	3 3/8	11 3/8	3 47/64	4	1 1/2	22336	AN36	W36	SDAF336	SR-0-36	LER234	LER223	635
SDAF22338	8 3/8	7 1/4	9 1/2	32	11 1/4	3 1/2	27 7/8	25 5/8	7 1/4	19 1/4	3 11/16	11 13/16	3 57/64	4	1 1/2	22338	AN38	W38	SDAF338	SR-44-38	LER240	LER229	700
SDAF22340	8 3/4	7 5/8	9 7/8	33 1/2	11 3/4	3 1/2	29 1/4	26 5/8	7 5/8	19 15/16	3 3/4	12 1/4	4 5/64	4	1 5/8	22340	AN40	W40	SDAF340	SR-0-40	LER244	LER233	725

(1) See page 120 for suggested shaft diameter S-2, S-3 tolerances.
(2) "Housing Only" includes: cap, base, cap bolts, triple ring seals and stabilizing rings as required.
(3) Stabilizing ring is used for fixed (FX) block; do not use for float (FL) mounting.

Note: Speed ratings are found in dimension tables in the spherical roller bearing section.

B

INCH STRAIGHT BORE MOUNTING SDAF231 AND SDAF232 SERIES

- Each assembly includes the housing cap and base, cap bolts, bearing, Locknut and washer, stabilizing ring and triple ring seals.
- To order pillow block housing only, use the numbers listed in the "Housing Only" column. These units include: cap, base, cap bolts, triple ring seals, and stabilizing ring.
- Assembly and pillow blocks described on this page constitute fixed units.
- To order float units, specify part number plus suffix "Float" or "FL".
- All assemblies shown are furnished in cast iron. If cast steel is desired, add the letter "S" to the alpha prefix (e.g., SDAFS 23152).
- For fixed applications, both stabilizing rings must be used. Do not use stabilizing rings for "Float" mounting.

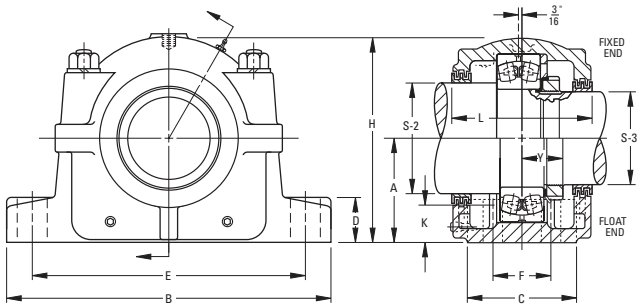

Pillow Block Assembly	Standard Shaft[1] Dia. S-2	S-3	A	B	C	D	E (Max.)	E (Min.)	F	H	K Oil Level	L	4 Base Bolts Req'd	Bearing Number	Lock Nut	Lock Washer	Housing[2] Only	Stabil-lizing[3] Ring 2 Req'd	Triple Seal 1 Req'd S-2	Triple Seal 1 Req'd S-3	Ass'y Wt.
	in.	in.	in.	in.	in.	in.	in.	in.	in.	in.	in.	in.	in.								lbs.
SERIES SDAF231																					
SDAF23152	11 1/2	9 15/16	10 1/4	35	13 1/8	3 3/4	30 1/2	29	8 3/4	20 7/8	3 3/8	14 1/4	1 5/8	23152	NO52	P52	SDAF3152	A5679	ER832	ER845	1050
SDAF23156	12 1/2	10 3/4	12	38 1/4	14 3/4	3 3/8	33 1/2	32 3/4	9	23 7/16	4 3/4	15 7/8	1 5/8	23156	NO56	P56	SDAF3156	A8967	ER866	ER826	1250
SDAF23160	13	11 1/2	12	38 1/4	14 3/4	3 3/8	33 1/2	32 3/4	9	23 7/16	4 1/8	15 7/8	1 5/8	23160	NO60	P60	SDAF3160	A8975	ER824	ER832	1350
SDAF23164	14	12 1/4	12 13/16	41 3/4	15 3/4	4 1/2	36 1/2	35	10 1/2	25 3/4	4 3/8	16 3/4	1 7/8	23164	NO64	P64	SDAF3164	A8970	ER876	ER983	1850
SDAF23168	15	13	14	43 3/4	17 3/4	5	38 1/4	36 3/4	10 3/4	27 7/8	4 15/16	18 3/4	2	23168	NO68	P68	SDAF3168	A8977	ER847	ER846	2450
SDAF23172	16	13 13/16	14 1/2	46	17 1/8	5 1/4	40 3/4	39 1/4	11	28 7/8	5	18	2	23172	NO72	P72	SDAF3172	A8974	ER809	ER874	2500
SDAF23176	17	14 5/8	14 1/2	46	17 1/8	5 1/4	40 3/4	39 1/4	11	28 7/8	4 5/8	18	2	23176	NO76	P76	SDAF3176	A8978	ER811	ER946	2500
SDAF23180	17 1/2	15 1/4	15 1/2	48 3/4	18 3/4	5 1/2	43 1/2	41 3/4	12 1/4	30 1/2	5 1/8	19 3/4	2 1/4	23180	NO80	P80	SDAF3180	A8979	ER948	ER895	2800
SDAF23184	18 1/2	16 3/16	17	52	21	5 1/2	46 1/8	44 3/8	14 1/2	33 3/4	6	22 1/4	2 1/4	23184	NO84	P84	SDAF3184	A8984	ER949	ER914	4300
SDAF23188	19 1/2	17	17	52	21	5 1/2	46 1/8	44 3/8	14 1/2	33 3/4	5 9/16	22 1/4	2 1/4	23188	NO88	P88	SDAF3188	A8976	ER950	ER811	4300
SDAF23192	20	17 3/4	18	54 1/4	21 5/8	5 3/4	48 7/8	47 1/8	15	35 3/4	6	22 3/4	2 1/2	23192	NO92	P92	SDAF3192	A8990	ER808	ER953	5000
SERIES SDAF232																					
SDAF23248	10 1/2	9 3/16	10 1/4	35	13 1/8	3 3/4	30 1/2	29	8 3/4	20 7/8	3 9/16	14 1/4	1 5/8	23248	NO48	P48	SDAF3248	A5679	ER840	ER945	1100
SDAF23252	11 1/2	9 15/16	12	38 1/4	14 3/4	3 3/8	33 1/2	32 3/4	9	23 7/16	4 3/4	15 7/8	1 5/8	23252	NO52	P52	SDAF3252	A8968	ER832	ER845	1350
SDAF23256	12 1/2	10 3/4	12	38 1/4	14 3/4	3 3/8	33 1/2	32 3/4	9	23 7/16	4 3/8	15 7/8	1 5/8	23256	NO56	P56	SDAF3256	A8975	ER866	ER826	1400
SDAF23260	13	11 1/2	12 13/16	41 3/4	15 3/4	4 1/2	36 1/2	35	10 1/2	25 3/4	4 1/2	16 3/4	1 7/8	23260	NO60	P60	SDAF3260	A8970	ER846	ER856	1900
SDAF23264	14	12 1/4	14	43 3/4	17 3/4	5	38 1/4	36 3/4	10 3/4	27 7/8	5 1/8	18 3/4	2	23264	NO64	P64	SDAF3264	A8977	ER876	ER983	2500
SDAF23268	15	13	14 1/2	46	17 1/8	5 1/4	40 3/4	39 1/4	11	28 7/8	5	18	2	23268	NO68	P68	SDAF3268	A8978	ER847	ER846	2650
SDAF23272	16	13 13/16	15 1/2	48 3/4	18 3/4	5 1/2	43 1/2	41 3/4	12 1/4	30 1/2	5 1/2	19 3/4	2 1/4	23272	NO72	P72	SDAF3272	A8979	ER809	ER874	2950
SDAF23276	17	14 5/8	15 1/2	48 3/4	18 3/4	5 1/2	43 1/2	41 3/4	12 1/4	30 1/2	4 3/8	19 3/4	2 1/4	23276	NO76	P76	SDAF3276	A8980	ER811	ER946	3050
SDAF23280	17 1/2	15 1/4	17	52	21	5 1/2	46 1/8	44 3/8	14 1/2	33 3/4	6	22 1/4	2 1/4	23280	NO80	P80	SDAF3280	A8976	ER948	ER895	4500
SDAF23284	18 1/2	16 3/16	18	54 1/2	21 5/8	5 3/4	48 7/8	47 1/8	15	35 3/4	6 3/8	22 3/4	2 1/2	23284	NO84	P84	SDAF3284	A8990	ER955	ER951	5000
SDAF23288	19 1/2	17	18	54 1/2	21 5/8	5 3/4	48 7/8	47 1/8	15	35 3/4	5 7/8	22 3/4	2 1/2	23288	NO88	P88	SDAF3288	A8988	ER956	ER838	5050

[1] See page 120 for suggested shaft diameter S-2, S-3 tolerances.
[2] "Housing Only" includes: cap, base, cap bolts, triple ring seals and stabilizing rings as required.
[3] Stabilizing ring is used for fixed (FX) block; do not use for float (FL) mounting.

Note: Speed ratings are found in dimension tables in the spherical roller bearing section.

INCH SHAFT DIAMETERS

B

SUGGESTED S-1, S-2, S-3 SHAFT DIAMETERS (INCHES)

	max.	min.
1 7/16	1.4375	1.4345
1 11/16	1.6875	1.6845
1 7/8	1.8750	1.8720
1 15/16	1.9375	1.9345
2 1/16	2.0625	2.0585
2 1/8	2.1250	2.1210
2 3/16	2.1875	2.1835
2 1/4	2.2500	2.2460
2 3/8	2.3750	2.3710
2 7/16	2.4375	2.4335
2 9/16	2.5625	2.5585
2 5/8	2.6250	2.6210
2 11/16	2.6875	2.6835
2 13/16	2.8125	2.8085
2 7/8	2.8750	2.8710
2 15/16	2.9375	2.9335
3	3.0000	2.9960
3 1/16	3.0625	3.0585
3 3/16	3.1875	3.1835
3 1/4	3.2500	3.2460
3 3/8	3.3750	3.3710
3 7/16	3.4375	3.4335
3 5/8	3.6250	3.6210
3 15/16	3.9375	3.9335
4 1/8	4.1250	4.1200
4 3/16	4.1875	4.1825
4 7/16	4.4375	4.4325
4 1/2	4.5000	4.4950
4 9/16	4.5625	4.5575
4 7/8	4.8750	4.8700
4 15/16	4.9375	4.9325
5 3/16	5.1875	5.1825
5 5/16	5.3125	5.3075
5 7/16	5.4375	5.4325
5 3/4	5.7500	5.7450
5 7/8	5.8750	5.8700
5 15/16	5.9375	5.9325
6 1/16	6.0625	6.0575
6 1/4	6.2500	6.2450
6 7/16	6.4375	6.4325
6 5/8	6.6250	6.6200
6 7/8	6.8750	6.8700
6 15/16	6.9375	6.9325
7	7.0000	6.9950
7 3/16	7.1875	7.1825

	max.	min.
7 1/4	7.2500	7.2450
7 7/16	7.4375	7.4325
7 5/8	7.6250	7.6200
7 13/16	7.8125	7.8075
7 15/16	7.9375	7.9325
8 5/16	8.3125	8.3065
8 3/8	8.3750	8.3690
8 7/16	8.4375	8.4315
8 1/2	8.5000	8.4940
8 3/4	8.7500	8.7440
8 15/16	8.9375	8.9315
9	9.0000	8.9940
9 7/16	9.4375	9.4315
9 1/2	9.5000	9.4940
9 9/16	9.5625	9.5565
9 15/16	9.9375	9.9315
10	10.0000	9.9940
10 7/16	10.4375	10.4305
10 1/2	10.5000	10.4930
10 15/16	10.9375	10.9305
11	11.0000	10.9930
11 7/16	11.4375	11.4305
11 1/2	11.5000	11.4930
11 15/16	11.9375	11.9305
12	12.0000	11.9930
12 7/16	12.4375	12.4295
12 1/2	12.5000	12.4920
12 15/16	12.9375	12.9295
13	13.0000	12.9920
13 7/16	13.4375	13.4295
13 1/2	13.5000	13.4920
13 15/16	13.9375	13.9295
14	14.0000	13.9920
15	15.0000	14.9920
16	16.0000	15.9920
17	17.0000	16.9920
17 1/2	17.5000	17.4920
18 1/2	18.5000	18.4920
19 1/2	19.5000	19.4920
20	20.0000	19.9920

Triple lip seals for other shaft diameters are available upon special order.

INCH TU TAKE-UP UNITS

- The same care taken in the selection of stationary pillow blocks must also be applied to selecting the proper take-up unit.
- Load requirements should be carefully evaluated before specifying a particular Timken take-up assembly.
- The pedestal is made of stress-relieved cast iron. End bases are made of ductile iron. The guide rail and screw are steel.
- Units are available with travel lengths from 12 to 36 inches, in 6-inch increments.
- Catalog numbers shown here are for the TU take-up unit only; pillow block assemblies must be ordered separately.
- Both two- and four-bolt pedestals are available and must be specified.

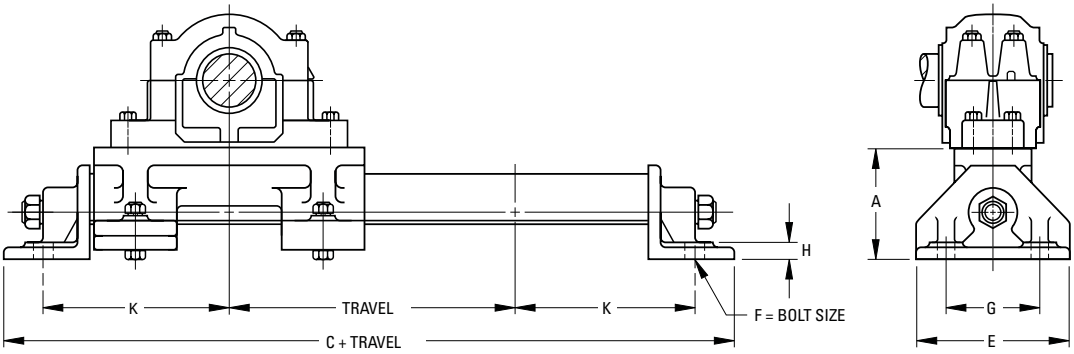

TU Take-Up Unit Catalog Number	Pillow Block Housing Number (SAF or SDAF)			A	C	E	F Bolt Size	G	H	K
				in.	in.	in.	in.	in	in.	in.
TU-3x*	515L	—	—	$4\frac{7}{8}$	20	$6\frac{1}{2}$	$\frac{5}{8}$	4	$\frac{3}{4}$	$8\frac{1}{4}$
TU-4x*	516L	—	517L	5	$21\frac{3}{4}$	$6\frac{1}{2}$	$\frac{3}{4}$	4	$\frac{3}{4}$	$9\frac{1}{8}$
TU-5x*	518L	—	615L	$5\frac{1}{4}$	23	$7\frac{1}{2}$	$\frac{3}{4}$	5	$\frac{3}{4}$	$9\frac{3}{4}$
TU-6x*	520L	—	617L	$5\frac{1}{2}$	$24\frac{3}{4}$	$7\frac{1}{2}$	$\frac{3}{4}$	5	$\frac{7}{8}$	$10\frac{3}{4}$
TU-7x*	522L	524L	620L	6	26	9	$\frac{3}{4}$	$6\frac{1}{2}$	1	$11\frac{1}{2}$
TU-8x*	526L	—	622L	6	28	9	$\frac{3}{4}$	$6\frac{1}{2}$	1	$12\frac{1}{2}$
TU-8-1x*	528L	—	—	6	$29\frac{1}{2}$	9	$\frac{3}{4}$	$6\frac{1}{2}$	1	$13\frac{1}{4}$

* Enter 12, 18, 24, 30 or 36 to indicate travel in inches.

B

INCH TTU TAKE-UP UNITS

- The same care taken in the selection of stationary pillow blocks must also be applied to selecting the proper take-up unit.
- Load requirements should be carefully evaluated before specifying a particular take-up assembly.
- Frame assembly and adjusting screw of TTU units are made of steel.
- The bearing housing is cast iron. Steel or ductile iron housings are additional options.
- Units include housing for adapter-mounted bearings only, for either fixed or float position (be sure to specify).
- One stabilizing ring is included for fixed position assemblies.
- Sealing is triple ring labyrinth or end closures.
- For extremely contaminated environments, the DUSTAC seal is suggested. (See the next page for more information on DUSTAC.)

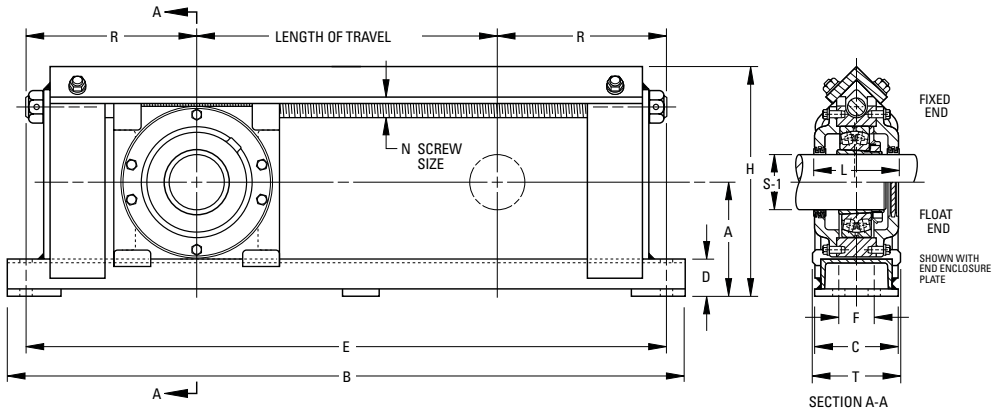

Take-Up Unit and Frame Number (Travel in Bold)	Standard Shaft[1] Dia. S-1	A	B	C	D	E	F	G Bolt Size	H	L	N	R	T	Bearing Number	Adapter[3] Assembly Number	Stabilizing[2] Ring 1 Req'd	Triple Seal 2 Req'd	Approx. Wt.
	in.	in.	in.	in.	in.	in.	in.	in.	in.	in.	in.	in.						lbs.
TTU-55-**12**	1 15/16	4 5/8	28 1/2	3 1/2	1 3/4	26 1/2	-	5/8	9	4	3/4	7 1/4	4	22211K	SNW-11	SR-11-0	LER24	55
TTU-55-**18**		4 5/8	34 1/2	3 1/2	1 3/4	32 1/2	-	5/8	9	4	3/4	7 1/4	4	22211K	SNW-11	SR-11-0	LER24	60
TTU-55-**24**		4 5/8	40 1/2	3 1/2	1 3/4	38 1/2	-	5/8	9	4	3/4	7 1/4	4	22211K	SNW-11	SR-11-0	LER24	65
TTU-65-**12**	2 3/16	5	29 1/2	3 1/2	1 3/4	27 1/2	-	5/8	10	4 1/2	3/4	7 3/4	4	22213K	SNW-13	SR-13-0	LER29	60
TTU-65-**18**		5	35 1/2	3 1/2	1 3/4	33 1/2	-	5/8	10	4 1/2	3/4	7 3/4	4	22213K	SNW-13	SR-13-0	LER29	65
TTU-65-**24**		5	41 1/2	3 1/2	1 3/4	39 1/2	-	5/8	10	4 1/2	3/4	7 3/4	4	22213K	SNW-13	SR-13-0	LER29	70
TTU-75-**6**	2 7/16	5 3/16	24 1/2	3 1/2	1 3/4	22 1/2	-	3/4	10 1/2	4 1/2	7/8	8 1/4	4	22215K	SNW-15	SR-15-0	LER37	65
TTU-75-**12**		5 3/16	30 1/2	3 1/2	1 3/4	28 1/2	-	3/4	10 1/2	4 1/2	7/8	8 1/4	4	22215K	SNW-15	SR-15-0	LER37	70
TTU-75-**18**		5 3/16	36 1/2	3 1/2	1 3/4	34 1/2	-	3/4	10 1/2	4 1/2	7/8	8 1/4	4	22215K	SNW-15	SR-15-0	LER37	75
TTU-75-**24**		5 3/16	42 1/2	3 1/2	1 3/4	40 1/2	-	3/4	10 1/2	4 1/2	7/8	8 1/4	4	22215K	SNW-15	SR-15-0	LER37	80
TTU-75-**30**		5 3/16	48 1/2	3 1/2	1 3/4	46 1/2	-	3/4	10 1/2	4 1/2	7/8	8 1/4	4	22215K	SNW-15	SR-15-0	LER37	85
TTU-85-**6**	2 15/16	6	26 1/2	4 5/8	2	24 1/2	2	5/8	12 1/4	4 3/4	1	9 1/4	5	22217K	SNW-17	SR-17-14	LER53	95
TTU-85-**12**		6	32 1/2	4 5/8	2	30 1/2	2	5/8	12 1/4	4 3/4	1	9 1/4	5	22217K	SNW-17	SR-17-14	LER53	100
TTU-85-**18**		6	38 1/2	4 5/8	2	36 1/2	2	5/8	12 1/4	4 3/4	1	9 1/4	5	22217K	SNW-17	SR-17-14	LER53	105
TTU-85-**24**		6	44 1/2	4 5/8	2	42 1/2	2	5/8	12 1/4	4 3/4	1	9 1/4	5	22217K	SNW-17	SR-17-14	LER53	110
TTU-85-**30**		6	50 1/2	4 5/8	2	48 1/2	2	5/8	12 1/4	4 3/4	1	9 1/4	5	22217K	SNW-17	SR-17-14	LER53	115
TTU-100-**12**	3 7/16	6 5/8	34 1/4	4 5/8	2	32	2	3/4	13 7/8	6	1 1/8	10	5 1/2	22220K	SNW-20	SR-20-17	LER102	140
TTU-100-**18**		6 5/8	40 1/4	4 5/8	2	38	2	3/4	13 7/8	6	1 1/8	10	5 1/2	22220K	SNW-20	SR-20-17	LER102	145
TTU-100-**24**		6 5/8	46 1/4	4 5/8	2	44	2	3/4	13 7/8	6	1 1/8	10	5 1/2	22220K	SNW-20	SR-20-17	LER102	150
TTU-100-**30**		6 5/8	52 1/4	4 5/8	2	50	2	3/4	13 7/8	6	1 1/8	10	5 1/2	22220K	SNW-20	SR-20-17	LER102	155
TTU-110-**12**	3 15/16	7 3/4	38 1/2	5 5/8	2 1/4	36	2 1/2	3/4	16 1/4	6 1/2	1 1/4	12	7	22222K	SNW-22	SR-22-19	LER109	200
TTU-110-**18**		7 3/4	44 1/2	5 5/8	2 1/4	42	2 1/2	3/4	16 1/4	6 1/2	1 1/4	12	7	22222K	SNW-22	SR-22-19	LER109	210
TTU-110-**24**		7 3/4	50 1/2	5 5/8	2 1/4	48	2 1/2	3/4	16 1/4	6 1/2	1 1/4	12	7	22222K	SNW-22	SR-22-19	LER109	220
TTU-110-**30**		7 3/4	56 1/2	5 5/8	2 1/4	54	2 1/2	3/4	16 1/4	6 1/2	1 1/4	12	7	22222K	SNW-22	SR-22-19	LER109	230
TTU-110-**36**		7 3/4	62 1/2	5 5/8	2 1/4	60	2 1/2	3/4	16 1/4	6 1/2	1 1/4	12	7	22222K	SNW-22	SR-22-19	LER109	240
TTU-130-**12**	4 7/16	8 5/8	45 3/4	8 3/4	2 3/4	40 3/4	5	1 1/8	18 7/8	7 1/4	2	14 3/8	10	22226K	SNW-26	SR-26-0	LER117	360
TTU-130-**18**		8 5/8	51 3/4	8 3/4	2 3/4	46 3/4	5	1 1/8	18 7/8	7 1/4	2	14 3/8	10	22226K	SNW-26	SR-26-0	LER117	380
TTU-130-**24**		8 5/8	57 3/4	8 3/4	2 3/4	52 3/4	5	1 1/8	18 7/8	7 1/4	2	14 3/8	10	22226K	SNW-26	SR-26-0	LER117	400
TTU-130-**30**		8 5/8	63 3/4	8 3/4	2 3/4	58 3/4	5	1 1/8	18 7/8	7 1/4	2	14 3/8	10	22226K	SNW-26	SR-26-0	LER117	420
TTU-140-**12**	4 15/16	9 1/2	49 1/2	9 3/4	3	44 1/2	5 1/2	1 1/4	20 3/8	7 1/2	2 1/4	16 1/4	11	22228K	SNW-28	SR-28-0	LER122	460
TTU-140-**18**		9 1/2	55 1/2	9 3/4	3	50 1/2	5 1/2	1 1/4	20 3/8	7 1/2	2 1/4	16 1/4	11	22228K	SNW-28	SR-28-0	LER122	480
TTU-140-**24**		9 1/2	61 1/2	9 3/4	3	56 1/2	5 1/2	1 1/4	20 3/8	7 1/2	2 1/4	16 1/4	11	22228K	SNW-28	SR-28-0	LER122	510
TTU-140-**30**		9 1/2	67 1/2	9 3/4	3	62 1/2	5 1/2	1 1/4	20 3/8	7 1/2	2 1/4	16 1/4	11	22228K	SNW-28	SR-28-0	LER122	530

[1] See page 120 for suggested shaft diameter S-1 tolerances.

Note: Speed ratings are found in dimension tables in the spherical roller bearing section.

[2] Stabilizing ring is used for fixed (FX) block; do not use for float (FL) mounting.

[3] Includes sleeve, Locknut and Lockwasher. Add shaft size to order.

INCH DUSTAC™ SHAFT SEAL

- Suggested for pillow blocks used in extremely contaminated environments, such as taconite mines.
- Provides protection against residual and airborne contaminants that exceeds the triple labyrinth shaft seal.
- Contributes significantly to extending bearing life; reduces costs by helping prevent premature bearing damage.
- Because of its unique design, no special finish is required on the shaft. DUSTAC is a patented device utilizing a V-shaped nitrile ring that rotates with the shaft and applies pressure to the cartridge face to exclude contaminates.

B

Pillow Block Housing Number 500	600	Shaft Diameter S-1	Assembly Standout B	DUSTAC™ Seal Assembly	V-Ring Seal	O-Ring	End Plug
515	615	$2\frac{7}{16}$	$\frac{59}{64}$	DV-37	V-60-A	2-228	EPS-4
516	616	$2\frac{11}{16}$	$\frac{59}{64}$	DV-44	V-65-A	2-231	EPS-5
517	—	$2\frac{15}{16}$	1	DV-53	V-75-A	2-230	EPS-6
518	—	$3\frac{3}{16}$	1	DV-69	V-80-A	2-235	EPS-9
520	620	$3\frac{7}{16}$	1	DV-102	V-85-A	2-234	EPS-11
522	622	$3\frac{15}{16}$	1	DV-109	V-100-A	2-239	EPS-13
524	624	$4\frac{3}{16}$	$1\frac{1}{16}$	DV-113	V-110-A	2-238	EPS-14
526	626	$4\frac{7}{16}$	$1\frac{1}{16}$	DV-117	V-110-A	2-242	EPS-15
528	628	$4\frac{15}{16}$	$1\frac{1}{16}$	DV-122	V-130-A	2-244	EPS-16
530	630	$5\frac{3}{16}$	$1\frac{1}{16}$	DV-125	V-130-A	2-247	EPS-17
532	632	$5\frac{7}{16}$	$1\frac{1}{16}$	DV-130	V-140-A	2-249	EPS-18
534	634	$5\frac{15}{16}$	$1\frac{1}{16}$	DV-140	V-150-A	2-253	EPS-20
536	636	$6\frac{7}{16}$	$1\frac{9}{64}$	DV-148	V-160-A	2-259	EPS-21
538	638	$6\frac{15}{16}$	$1\frac{9}{64}$	DV-155	V-180-A	2-259	EPS-22
540	640	$7\frac{3}{16}$	$1\frac{9}{64}$	DV-159	V-180-A	2-259	EPS-23
544	—	$7\frac{15}{16}$	$1\frac{15}{32}$	DV-167	V-200-A	2-262	EPS-25

Table 30.

ORDER INSTRUCTIONS

- Shaft seal may be ordered in place of the standard LER triple ring seals supplied with the pillow blocks listed. They also are available to retrofit existing installations.
- To order any pillow block housings with DUSTAC shaft seal on both sides, add the suffix "DV" to the number (e.g., SAF2522DV).
- To order pillow block housings with DUSTAC shaft seal and one end closed, add the suffix "DC" to the number (e.g., SAF22522DC).
- Standard sizes of DUSTAC shaft seals are shown in the table. Other sizes are available upon request.

INSTALLATION PROCEDURE

1. Check shaft diameters to print specification. Remove any burrs or sharp edges. Be sure shaft surface is clean and dry beyond the area of seal location.
2. Expand the V-ring seal over the shaft to the approximate inboard position (reference dimension "B" in the tables). *Make sure the lip of the seal faces the bearing.*
3. Slide the seal cartridge onto the shaft until the V-ring fits into its cavity.
4. Mount the bearing, sleeve, Lockwasher and Locknut in normal manner and adjust for internal clearance.
5. If both ends have seals, repeat steps 2 and 3 with the V-ring going on last with its lip facing the bearing.
6. Thoroughly clean the housing base and remove any paint or burrs from the mating surfaces of the housing cap.
7. Lower shaft, bearing and seals into the housing base, taking care to guide the seals into the seal grooves.
8. On each shaft there must be only one fixed bearing. If the bearing is to be fixed, the stabilizing ring can be inserted between the bearing outer ring and the housing shoulder on the Locknut side of the bearing. All other bearings on this shaft should be centered in the housing.
9. The upper half of the housing or cap should be thoroughly cleaned and checked for burrs. Place it over the bearing and seals. The dowel pins will align the cap to the base. NOTE: housing caps and bases are not interchangeable.
10. After cap bolts are tightened, it is most important to position the V-ring seal to its proper fitted width. This is accomplished by moving the seal until it is flush with the outside face of the cavity. This provides proper compression of the lip against the cartridge face.

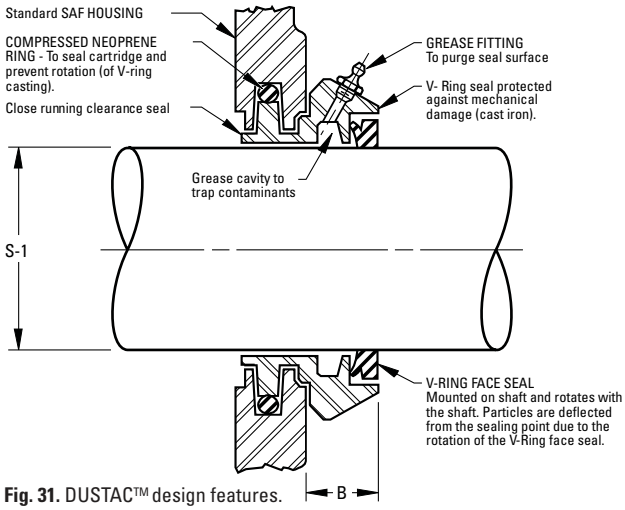

Fig. 31. DUSTAC™ design features.

B

INCH SINE BAR GAGES

- Tapered-bore, anti-friction bearings are mounted either on adapter sleeves or on tapered shaft seats.
- In cases where tapered bore bearings are mounted directly on the shaft, the shaft must conform to the tapered bore of the bearing to assure proper fit. If a proper fit is not achieved, the results could be:
  1. Turning of the bearing inner race on the shaft.
  2. Uneven loading of the bearing.
  3. Severe inner race hoop stress.
  4. Insufficient support (back-up) of the inner race on the shaft.
- All of these conditions could lead to premature bearing damage. Therefore, the manufacture, maintenance and measurement of accurate shaft tapers is important.
- There are two accepted ways of measuring tapered shafts: ring gages and sine bar gages.
- Precision measurement of tapered shafts is difficult with ring gages and may be impossible in the case of large shafts where gages are large, cumbersome and heavy.
- Sine bar gages provide an accurate and easy method of measurement.
- Lightweight and easy to handle and learn, sine bar gages achieve precise gaging of the shaft size and taper.

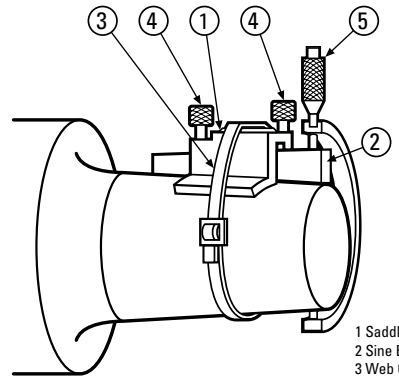

1 Saddle
2 Sine Bar
3 Web Clamp
4 Locking Screws
5 Micrometer (not included)

Fig. 32. Parts of a sine gage.

- A complete set for measurement of 1:12 shaft tapers consists of 3 in., 4 in., 5 $^1/_2$ in., 7 in., 10 in. and 14 in. sine bar gages, sine bar saddle no. T-5491-C, web clamp no. T-5489-A and a wooden box no. T-5224-C. A complete set for 1:30 shaft tapers consists of 4 in., 6 in., 8 in. and 12 in. sine bar gages.
- Sine bars can be purchased individually, or in any combination of sizes to meet your individual needs.
- All sine bars require a sine bar saddle and web clamp. A wooden box is optional.
- For information on the use of sine bars, prices and delivery, consult your Timken representative.

PART NUMBER	SIZE INCH	FOR BEARINGS
T-3071-C	3.0000	22232K to 22240K
T-3071-C	3.0000	22322K to 22328K
T-3071-C	3.0000	23040K to 23048K
T-3071-C	3.0000	23130K to 23136K
T-3071-C	3.0000	23226K to 23230K
		23960K to 23972K
T-3072-C	4.0000	22248K to 22256K
T-3072-C	4.0000	22330K to 22340K
T-3072-C	4.0000	23052K to 23076K
T-3072-C	4.0000	23138K to 23148K
T-3072-C	4.0000	23232K to 23240K
		23976K to 239/560K
T-3073-C	5.5000	22260K to 22264K
T-3073-C	5.5000	22344K to 22356K
T-3073-C	5.5000	23080K to 230/500K
T-3073-C	5.5000	23152K to 23164K
T-3073-C	5.5000	23244K to 23256K
		239/600K to 239/710K

Table 31.

Note: All sine bars require a sine bar saddle, T-5491-C and a web clamp T-5489-A.

PART NUMBER	SIZE INCH	FOR BEARINGS
T-3074-C	7.0000	230/530K to 230/750K
T-3074-C	7.0000	23168K to 23196K
T-3074-C	7.0000	23260K to 23276K
		239/750K to 239/1120K
T-3075-C	10.0000	230/800K to 230/1180
T-3075-C	10.0000	231/500K to 231/710K
T-3075-C	10.0000	23280K to 232/530K
		230/1250 and up
T-3076-C	14.0000	231/750K and up
T-3076-C	14.0000	232/560K and up
		239/118K and up
T-5476-C	4.0000	24040K to 24056K
T-5476-C	4.0000	24132K to 24144K
T-5477-C	6.0000	24060K to 24084K
T-5477-C	6.0000	24148K to 24160K
T-5478-C	8.0000	24089K to 240/630K
T-5478-C	8.0000	24164K to 24192K
T-5479-C	12.0000	240/670K and up
T-5479-C	12.0000	24196K and up

Table 32.

The table above represents the sine bar sizes developed for a full range of tapered bore bearings with 1:12 and a 1:30 taper. Additional sizes are available to fit a variety of width and taper combinations. Consult your local Timken representative for availability.

INCH HYDRAULIC NUTS

INTRODUCTION

- Designed to install and remove tapered bore bearings with minimal effort.
- Allow better control of the bearing internal clearance reduction without damaging the bearing or other components.
- Substantially reduces downtime during installation or removal of tapered bore bearings.

DESCRIPTION

- Consist of a female threaded ring and a male ring with two O-ring seals.
- All hydraulic nuts are supplied with:
  - Quick connection fittings (male ¼ in. B.S.P. and female $^3/_8$ in. N.P.T.).
  - Two pipe plugs ¼ in. B.S.P.
  - One set of spare O-rings.

ORDERING COMPONENTS:

- To order spare components for the hydraulic nuts, order part numbers as listed below:
- O-ring Seal Kits:
  Use the hydraulic nut part number plus the number 132.
  Example: HMVC 40/132
- Pipe Plug ¼ in. B.S.P.:
  Use the hydraulic nut part number plus the number 647.
  Example: HMVC 40/647
- Quick Connection Fittings (male ¼ in. B.S.P. and female $^3/_8$ in. N.P.T.):
  Use the hydraulic nut part number plus the number 849.
  Example: HMVC 40/849

ENGINEERING SERVICES

- Special applications should be referred to a Timken representative for review.

B

INSTRUCTIONS

- When the hydraulic nut is used, the piston must be in the innermost position.
- For this operation, please ensure the valve of the hydraulic hose is disconnected from the nut so the nut is not under pressure.
- To contract the piston inside the female threaded ring, insert a rod or bar in one of the four drilled holes located on the outside diameter of the female threaded ring.
- Screw the hydraulic nut on the thread with the piston in contact with the surface, until the groove machined on the outside diameter of the piston near the outboard face is level with the face of the female threaded ring.
- One of the two threaded holes must be plugged with the ¼" B.S.P. pipe plug before the hydraulic nut is pressurized.
- The maximum pressure permissible in the hydraulic nut is 14000 psi (110 Kpa).
- The oil viscosity suggested is 1400 SUS (300cSt) at operating temperature (SAE 90 oil).
- To avoid overextension of the piston, a second groove has been machined on the outside diameter of the piston inboard used to judge contraction.
- When this second groove is level with the face of the female threaded ring, the piston has reached its length of travel as shown in the illustration. If the second groove of the piston travels past the face of the female threaded ring, the hydraulic nut can be damaged.
- Should the oil start to leak from the piston area, it is certain that the O-ring seals are damaged or worn and need to be replaced.
- When the hydraulic nut is not in use, ensure that the threaded holes are plugged to prevent entry of contaminants in the piston cavity.
- To help prevent against corrosion during storage, apply a coat of light oil on the hydraulic nut surfaces.
- Contact your Timken representative to receive special warnings against reasonably unforeseen dangers.

INSTALLATION

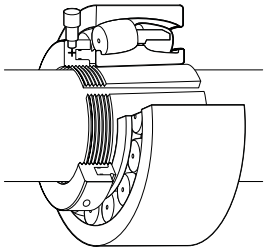

Hydraulic nut used to mount the bearing on a pull type sleeve.

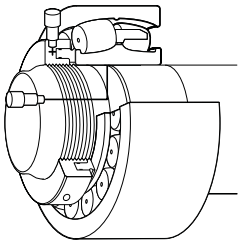

Hydraulic nut used to mount the bearing on tapered journal.

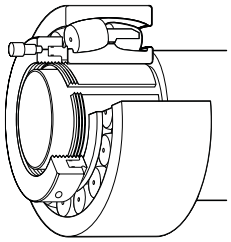

Hydraulic nut used to mount the bearing on a push type adapter sleeve.

REMOVAL

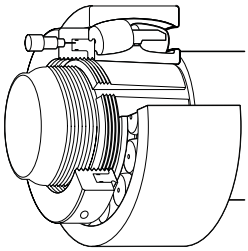

Hydraulic nut used to withdraw a push type adapter sleeve.

B

HYDRAULIC NUTS – METRIC

Part Number	Threads B	C	D	Dimensions E	E_1	A	Piston Length of Travel	Piston Area	Assembly Weight
	mm	mm	mm	mm	mm	mm	mm	mm²	kg.
HMV - 10	M 50X1.5	114	38	86	51	4	5	2900	2.5
HMV - 12	M 60X2	125	38	94	61	5	5	3200	2.8
HMV - 13	M 65X2	135	38	101	66	5	5	3500	3.0
HMV - 14	M 70X2	140	38	107	71	5	5	3900	3.3
HMV - 15	M 75X2	145	38	112	76	5	5	4100	3.5
HMV - 16	M 80X2	150	38	117	81	5	5	4200	3.8
HMV - 17	M 85X2	155	38	122	86	5	5	4400	3.9
HMV - 18	M 90X2	160	38	127	91	5	5	4800	4.1
HMV - 19	M 95X2	165	38	133	96	5	5	5000	4.4
HMV - 20	M 100X2	170	38	138	101	6	5	5200	4.5
HMV - 21	M 105X2	175	38	143	106	6	5	5400	5.4
HMV - 22	M 110X2	180	38	149	111	6	5	5700	5.7
HMV - 23	M 115X2	185	38	154	116	6	5	5900	5.1
HMV - 24	M 120X2	190	38	159	121	6	5	6100	5.3
HMV - 25	M 125X2	195	38	164	126	6	5	6300	5.4
HMV - 26	M 130X2	200	38	170	131	6	5	6500	5.7
HMV - 27	M 135X2	205	38	175	136	6	5	6700	5.9
HMV - 28	M 140X2	210	38	180	141	7	5	6900	6.1
HMV - 29	M 145X2	215	39	186	146	7	5	7300	6.5
HMV - 30	M 150X2	220	39	190	151	7	5	7500	6.6
HMV - 31	M 155X3	225	39	198	156	7	5	8100	6.9
HMV - 32	M 160X3	235	40	206	161	7	6	8600	7.7
HMV - 33	M 165X3	240	40	209	166	7	6	9000	8.0
HMV - 34	M 170X3	245	41	215	171	7	6	9500	8.4
HMV - 36	M 180X3	255	41	227	181	7	6	10300	9.1
HMV - 38	M 190X3	270	42	239	191	8	7	11500	10.8
HMV - 40	M 200X3	280	43	251	201	8	8	12500	11.4
HMV - 41	Tr 205X4	290	43	256	207	8	8	12900	12.2
HMV - 42	Tr 210X4	295	44	262	212	8	9	13500	12.5
HMV - 43	Tr 215X4	300	44	267	217	8	9	13800	13.0
HMV - 44	Tr 220X4	305	44	273	222	8	9	14400	13.4
HMV - 45	Tr 225X4	315	45	280	227	8	9	15200	14.6
HMV - 46	Tr 230X4	320	45	285	232	8	9	15600	14.8
HMV - 47	Tr 235X4	325	46	291	237	8	10	16200	16.0
HMV - 48	Tr 240X4	330	46	296	242	9	10	16500	16.3
HMV - 50	Tr 250X4	345	46	307	252	9	10	17800	17.6
HMV - 52	Tr 260X4	355	47	319	262	9	11	18800	19.0
HMV - 54	Tr 270X4	370	48	330	272	9	12	19700	20.4
HMV - 56	Tr 280X4	380	49	341	282	9	12	21100	22.0
HMV - 58	Tr 290X4	390	49	353	292	9	13	22600	22.5
HMV - 60	Tr 300X4	405	51	364	302	10	14	23600	25.6
HMV - 62	Tr 310X5	415	52	375	312	10	14	24900	27.0
HMV - 64	Tr 320X5	430	53	387	322	10	14	26300	29.6
HMV - 66	Tr 330X5	440	53	397	332	10	14	27000	31.0
HMV - 68	Tr 340X5	450	53	408	342	10	14	28400	32.5
HMV - 69	Tr 345X5	455	54	414	347	10	14	29400	33.6
HMV - 70	Tr 350X5	465	56	420	352	10	14	30000	35.0
HMV - 72	Tr 360X5	475	56	431	362	10	15	31300	37.0
HMV - 73	Tr 365X5	482	57	436	367	11	15	31700	38.5
HMV - 74	Tr 370X5	490	57	442	372	11	16	32800	39.2
HMV - 76	Tr 380X5	500	58	452	382	11	16	33600	41.0
HMV - 77	Tr 385X5	505	58	459	387	11	16	34700	42.0
HMV - 80	Tr 400X5	525	60	475	402	11	17	36700	46.0
HMV - 82	Tr 410X5	535	61	486	412	11	17	38300	48.2
HMV - 84	Tr 420X5	545	61	498	422	11	17	40000	50.4
HMV - 86	Tr 430X5	555	62	508	432	11	17	40800	53.0
HMV - 88	Tr 440X5	565	62	519	442	12	17	42500	55.0
HMV - 90	Tr 450X5	580	64	530	452	12	17	44100	58.2
HMV - 92	Tr 460X5	590	64	541	462	12	17	45000	61.0
HMV - 94	Tr 470X5	600	65	552	472	12	18	46900	63.7
HMV - 96	Tr 480X5	612	65	563	482	12	19	48500	65.0
HMV - 98	Tr 490X5	625	66	573	492	12	19	49800	69.0
HMV - 100	Tr 500X5	635	67	585	502	12	19	52000	71.5
HMV - 102	Tr 510X6	645	68	596	512	12	20	53300	75.0
HMV - 104	Tr 520X6	657	68	606	522	13	20	54200	77.0
HMV - 106	Tr 530X6	670	69	617	532	13	21	56200	80.0
HMV - 108	Tr 540X6	680	69	629	542	13	21	58200	83.0
HMV - 110	Tr 550X6	692	70	639	552	13	21	59200	86.0
HMV - 112	Tr 560X6	705	71	650	562	13	22	61200	90.0
HMV - 114	Tr 570X6	715	72	661	572	13	23	63200	93.0
HMV - 116	Tr 580X6	725	72	671	582	13	23	64200	96.0
HMV - 120	Tr 600X6	750	73	693	602	13	23	67400	100.0
HMV - 126	Tr 630X6	780	74	726	632	14	23	72900	110.0
HMV - 130	Tr 650X6	805	75	747	652	14	23	76200	116.0
HMV - 134	Tr 670X6	825	76	768	672	14	24	79500	123.0
HMV - 138	Tr 690X6	850	77	791	692	14	25	84200	130.0
HMV - 142	Tr 710X7	870	78	812	712	15	25	87700	137.0
HMV - 150	Tr 750X7	915	79	855	752	15	25	97000	150.0
HMV - 160	Tr 800X7	970	80	908	802	16	25	104000	173.0
HMV - 170	Tr 850X7	1020	83	962	852	16	26	114600	190.0
HMV - 180	Tr 900X7	1070	86	1015	902	17	30	124000	210.0
HMV - 190	Tr 950X8	1125	86	1069	952	17	30	135600	238.0
HMV - 200	Tr 1000X8	1180	88	1122	1002	17	34	145600	263.0
HMV - 212	Tr 1060X8	1255	95	1184	1063	18	34	161200	325.0
HMV - 216	Tr 1080X8	1280	100	1206	1083	18	34	167400	345.0
HMV - 224	Tr 1120X8	1340	106	1250	1123	19	36	178200	410.0
HMV - 236	Tr 1180X8	1420	115	1320	1183	22	40	189200	530.0

HMV - 10 through HMV - 40 have a Metric ISO fine thread profile.
HMV - 41 through HMV-236 have a Metric ISO trapezoidal thread.

B

INCH HYDRAULIC NUTS

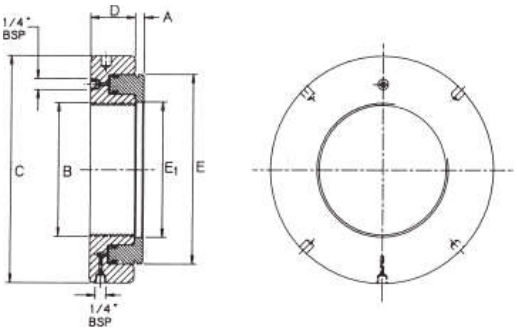

Part Number	B Maj. Dia.	Threads No. Per Inch	C	D	Dimensions E	E_1	A	Piston Length of Travel	Piston Area	Assembly Weight
			in.	in.	in.	in.	in.	in.	in.²	lbs.
HMVC - 10	1.967	18	4.488	1.496	3.386	2.008	0.157	0.197	4.5	5.5
HMVC - 12	2.360	18	4.921	1.496	3.701	2.402	0.197	0.197	5.0	6.2
HMVC - 13	2.548	18	5.315	1.496	3.976	2.598	0.197	0.197	5.4	6.6
HMVC - 14	2.751	18	5.512	1.496	4.213	2.795	0.197	0.197	6.0	7.3
HMVC - 15	2.933	12	5.709	1.496	4.409	2.992	0.197	0.197	6.3	7.7
HMVC - 16	3.137	12	5.906	1.496	4.606	3.189	0.197	0.197	6.5	8.4
HMVC - 17	3.340	12	6.102	1.496	4.803	3.386	0.197	0.197	6.8	8.6
HMVC - 18	3.527	12	6.299	1.496	5.000	3.583	0.197	0.197	7.4	9.0
HMVC - 19	3.730	12	6.496	1.496	5.236	3.780	0.197	0.197	7.7	9.7
HMVC - 20	3.918	12	6.693	1.496	5.433	3.976	0.236	0.197	8.1	10.0
HMVC - 22	4.325	12	7.087	1.496	5.866	4.370	0.236	0.197	8.8	12.5
HMVC - 24	4.716	12	7.480	1.496	6.260	4.764	0.236	0.197	9.5	11.7
HMVC - 26	5.106	12	7.874	1.496	6.693	5.157	0.236	0.197	10.1	12.5
HMVC - 28	5.497	12	8.268	1.496	7.087	5.551	0.276	0.197	10.7	13.4
HMVC - 30	5.888	12	8.661	1.535	7.480	5.945	0.276	0.197	11.6	14.5
HMVC - 32	6.284	8	9.252	1.575	8.110	6.339	0.276	0.236	13.3	17.0
HMVC - 34	6.659	8	9.645	1.614	8.465	6.732	0.276	0.236	14.7	18.5
HMVC - 36	7.066	8	10.039	1.615	8.858	7.126	0.276	0.236	16.0	20.0
HMVC - 38	7.472	8	10.630	1.653	9.409	7.520	0.315	0.276	17.8	23.1
HMVC - 40	7.847	8	11.024	1.693	9.882	7.913	0.315	0.276	19.4	25.1
HMVC - 44	8.628	8	12.008	1.732	10.748	8.740	0.315	0.354	22.3	29.5
HMVC - 48	9.442	6	12.992	1.811	11.654	9.528	0.354	0.394	25.6	35.9
HMVC - 52	10.192	6	13.976	1.850	12.559	10.315	0.354	0.433	29.1	41.8
HMVC - 56	11.004	6	14.961	1.929	13.425	11.102	0.354	0.472	32.7	48.4
HMVC - 60	11.785	6	15.945	2.008	14.331	11.890	0.394	0.551	36.6	56.3
HMVC - 64	12.562	6	16.929	2.087	15.236	12.677	0.394	0.551	40.8	65.1
HMVC - 68	13.334	5	17.717	2.087	16.063	13.465	0.394	0.551	44.0	71.5
HMVC - 72	14.170	5	18.701	2.205	16.969	14.252	0.394	0.590	48.5	81.4
HMVC - 76	14.957	5	19.685	2.283	17.795	15.039	0.433	0.630	52.1	90.2
HMVC - 80	15.745	5	20.669	2.362	18.701	15.827	0.433	0.669	56.9	101.2
HMVC - 84	16.532	5	21.457	2.401	19.606	16.614	0.433	0.669	62.0	110.9
HMVC - 88	17.319	5	22.244	2.441	20.433	17.402	0.472	0.669	65.9	121.0
HMVC - 92	18.107	5	23.228	2.520	21.299	18.189	0.472	0.669	69.8	134.2
HMVC - 96	18.894	5	24.094	2.559	22.165	18.976	0.472	0.748	75.2	143.0
HMVC - 100	19.682	5	25.000	2.598	23.031	19.764	0.472	0.748	80.6	157.3
HMVC - 106	20.867	4	26.378	2.716	24.291	20.945	0.512	0.827	87.1	176.0
HMVC - 112	21.923	4	27.756	2.795	25.591	22.126	0.512	0.866	94.9	198.0
HMVC - 120	23.623	4	29.528	2.874	27.283	23.701	0.512	0.905	104.5	220.0
HMVC - 126	24.804	4	30.709	2.913	28.583	24.882	0.551	0.905	113.0	242.0
HMVC - 134	26.379	4	32.480	2.992	30.236	26.457	0.551	0.945	123.2	270.6
HMVC - 142	27.961	3	34.252	3.071	31.969	28.031	0.590	0.984	135.9	301.4
HMVC - 150	29.536	3	36.024	3.110	33.661	29.606	0.590	0.984	150.4	330.0
HMVC - 160	31.504	3	38.189	3.150	35.748	31.575	0.630	0.984	161.2	380.6
HMVC - 170	33.473	3	40.157	3.268	37.874	33.543	0.630	1.024	177.6	418.0
HMVC - 180	35.441	3	42.126	3.386	39.960	35.511	0.669	1.181	192.2	462.0
HMVC - 190	37.410	3	44.291	3.386	42.087	37.480	0.669	1.181	210.2	523.6

HMVC - 10 through HMVC - 64 have American National Threads Class 3.
HMVC -68 through HMVC-190 have Acme General Purpose Threads Class 3G.

B

INCH SHAFT ADAPTER ACCESSORIES FOR TAPERED BORE BEARINGS

SNW/SNP - PULL TYPE SLEEVE, LOCKNUT, LOCKWASHER/LOCKPLATE ASSEMBLIES

- The table below shows dimensions for adapter assemblies and components used in the mounting of tapered bore bearings on shafts.
- SNW assembly consists of a sleeve, Locknut and Lockwasher.
- SNP assembly consists of a sleeve, Locknut and Lockplate.

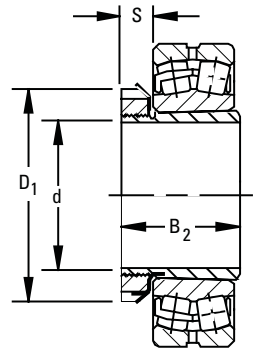

Tapered bore bearing plus SNW.

Bearing Number	Accessory Numbers				Shaft Dimensions		Adapter Dimensions			SNW/SNP Assembly Weight
	Assembly	Sleeve	Locknut	Lockwasher Lockplate	d Diameter	Tolerance +.000" To	B_2	S	D_1	
					in.	in.	in.	in.	in.	lbs.
SERIES 222K										
22209K	SNW-09	S-09	N-09	W-09	1 7/16	-.003	1 37/64	1/2	2 17/32	0.6
22210K	SNW-10	S-10	N-10	W-10	1 11/16	-.003	1 49/64	9/16	2 11/16	0.7
22211K	SNW-11	S-11	N-11	W-11	1 15/16	-.003	1 27/32	9/16	2 31/32	0.8
22212K	SNW-12	S-12	N-12	W-12	2 1/16	-.004	1 63/64	19/32	3 5/32	1.1
22213K	SNW-13	S-13	N-13	W-13	2 3/16	-.004	2 3/32	5/8	3 3/8	1.4
22214K	SNW-14	S-14	N-14	W-14	2 5/16	-.004	2 11/64	5/8	3 5/8	1.8
22215K	SNW-15	S-15	AN-15	W-15	2 7/16	-.004	2 19/64	43/64	3 7/8	2.0
22216K	SNW-16	S-16	AN-16	W-16	2 11/16	-.004	2 3/8	43/64	4 5/32	2.4
22217K	SNW-17	S-17	AN-17	W-17	2 15/16	-.004	2 31/64	45/64	4 13/32	3.0
22218K	SNW-18	S-18	AN-18	W-18	3 3/16	-.004	2 41/64	25/32	4 21/32	3.0
22219K	SNW-19	S-19	AN-19	W-19	3 5/16	-.004	2 49/64	13/16	4 15/16	3.3
22220K	SNW-20	S-20	AN-20	W-20	3 7/16	-.004	2 7/8	27/32	5 3/16	4.4
22222K	SNW-22	S-22	AN-22	W-22	3 15/16	-.004	3 13/64	29/32	5 23/32	5.0
22224K	SNW-24	S-24	AN-24	W-24	4 3/16	-.005	3 15/32	15/16	6 1/8	6.7
22226K	SNW-26	S-26	AN-26	W-26	4 7/16	-.005	3 49/64	1	6 3/4	8.6
22228K	SNW-28	S-28	AN-28	W-28	4 15/16	-.005	3 63/64	1 1/16	7 3/32	10.3
22230K	SNW-30	S-30	AN-30	W-30	5 3/16	-.005	4 15/64	1 1/8	7 11/16	13.5
22232K	SNW-32	S-32	AN-32	W-32	5 7/16	-.005	4 37/64	1 3/16	8 1/16	15.6
22234K	SNW-34	S-34	AN-34	W-34	5 15/16	-.005	4 27/32	1 7/32	8 21/32	19.4
22236K	SNW-36	S-36	AN-36	W-36	6 7/16	-.005	5 1/32	1 1/4	9 1/16	20.5
22238K	SNW-38	S-38	AN-38	W-38	6 15/16	-.005	5 17/64	1 9/32	9 15/32	23.4
22240K	SNW-40	S-40	AN-40	W-40	7 3/16	-.005	5 31/64	1 11/32	9 27/32	30.5
22244K	SNW-44	S-44	N-044	W-44	7 15/16	-.005	5 29/32	1 3/8	11	33.0
SERIES 230K										
23024K	SNW-3024	S-3024	N-024	W-024	4 3/16	-.005	2 61/64	13/16	5 11/16	6.1
23026K	SNW-3026	S-3026	N-026	W-026	4 7/16	-.005	3 15/64	7/8	6 1/8	7.5
23028K	SNW-3028	S-3028	N-028	W-028	4 15/16	-.005	3 11/32	15/16	6 1/2	8.4
23030K	SNW-3030	S-3030	N-030	W-030	5 3/16	-.005	3 31/64	31/32	7 1/8	9.8
23032K	SNW-3032	S-3032	N-032	W-032	5 7/16	-.005	3 23/32	1 1/32	7 1/2	11.8
23034K	SNW-3034	S-3034	N-034	W-034	5 15/16	-.005	4 1/64	1 1/16	7 7/8	13.3
23036K	SNW-3036	S-3036	N-036	W-036	6 7/16	-.005	4 11/32	1 3/32	8 1/4	15.2
23038K	SNW-3038	S-3038	N-038	W-038	6 15/16	-.005	4 13/32	1 1/8	8 11/16	16.7
23040K	SNW-3040	S-3040	N-040	W-040	7 3/16	-.005	4 3/4	1 3/16	9 7/16	19.7
23044K	SNW-3044	S-3044	N-044	W-044	7 15/16	-.005	5 1/8	1 1/4	10 1/4	24.4
23048K	SNP-3048	S-3048	N-048	P-48	8 15/16	-.006	5 7/16	1 11/32	11 7/16	32.2
23052K	SNP-3052	S-3052	N-052	P-52	9 7/16	-.006	6 1/64	1 13/32	12 3/16	41.1
23056K	SNP-3056	S-3056	N-056	P-56	10 7/16	-.007	6 3/16	1 1/2	13	45.4
23060K	SNP-3060	S-3060	N-060	P-60	10 15/16	-.007	6 47/64	1 9/16	14 3/16	58.9
23064K	SNP-3064	S-3064	N-064	P-64	11 15/16	-.007	6 61/64	1 21/32	15	65.7
23068K	SNP-3068	S-3068	N-068	P-68	12 7/16	-.008	7 35/64	1 25/32	15 3/4	77.8
23072K	SNP-3072	S-3072	N-072	P-72	13 7/16	-.008	7 37/64	1 25/32	16 1/2	86.2
23076K	SNP-3076	S-3076	N-076	P-76	13 15/16	-.008	7 3/4	1 57/64	17 3/4	94.3
23080K	SNP-3080	S-3080	N-080	P-80	15	-.008	8 13/32	2 1/16	18 1/2	100.0

INCH SHAFT ADAPTER ACCESSORIES FOR TAPERED BORE BEARINGS

SNW/SNP - PULL TYPE SLEEVE, LOCKNUT, LOCKWASHER/LOCKPLATE ASSEMBLIES

- The table below shows dimensions for adapter assemblies and components used in the mounting of tapered bore bearings on shafts.
- SNW assembly consists of a sleeve, Locknut and Lockwasher.
- SNP assembly consists of a sleeve, Locknut and Lockplate.

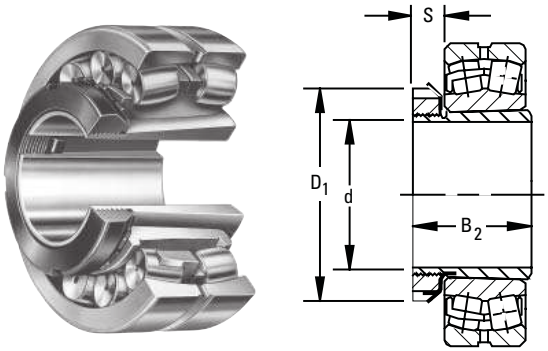

Tapered bore bearing plus SNW.

Bearing Number		Accessory Numbers: Assembly	Sleeve	Locknut	Lockwasher Lockplate	Shaft Dimensions: d Diameter	Tolerance +.000" To	Adapter Dimensions: B_2	S	D_1	SNW/SNP Assembly Weight
						in.	in.	in.	in.	in.	lbs.
SERIES 223K AND 232K											
22308K		SNW-108	S-108	N-08	W-08	1 5/16	-.003	2 1/64	1/2	2 1/4	0.8
22309K		SNW-109	S-109	N-09	W-09	1 7/16	-.003	2 9/64	1/2	2 17/32	0.8
22310K		SNW-110	S-110	N-10	W-10	1 11/16	-.003	2 25/64	9/16	2 11/16	0.9
22311K		SNW-111	S-111	N-11	W-11	1 15/16	-.003	2 33/64	9/16	2 31/32	0.9
22312K		SNW-112	S-112	N-12	W-12	2 1/16	-.004	2 21/32	19/32	3 5/32	1.2
22313K		SNW-113	S-113	N-13	W-13	2 3/16	-.004	2 49/64	5/8	3 3/8	1.7
22314K		SNW-114	S-114	N-14	W-14	2 5/16	-.004	2 61/64	5/8	3 5/8	2.3
22315K		SNW-115	S-115	AN-15	W-15	2 7/16	-.004	3 5/64	43/64	3 7/8	3.0
22316K		SNW-116	S-116	AN-16	W-16	2 11/16	-.004	3 13/64	43/64	4 5/32	3.2
22317K		SNW-117	S-117	AN-17	W-17	2 15/16	-.004	3 5/16	45/64	4 13/32	3.5
22318K		SNW-118	S-118	AN-18	W-18	3 3/16	-.004	3 35/64	25/32	4 21/32	4.0
22319K		SNW-119	S-119	AN-19	W-19	3 5/16	-.004	3 45/64	13/16	4 15/16	5.0
22320K	23220K	SNW-120	S-120	AN-20	W-20	3 7/16	-.004	3 31/32	27/32	5 3/16	6.2
22322K	23222K	SNW-122	S-122	AN-22	W-22	3 15/16	-.004	4 11/32	29/32	5 23/32	6.5
22324K	23224K	SNW-124	S-124	AN-24	W-24	4 3/16	-.005	4 41/64	15/16	6 1/8	8.0
22326K	23226K	SNW-126	S-126	AN-26	W-26	4 7/16	-.005	4 63/64	1	6 3/4	12.4
22328K	23228K	SNW-128	S-128	AN-28	W-28	4 15/16	-.005	5 21/64	1 1/16	7 3/32	13.0
22330K	23230K	SNW-130	S-130	AN-30	W-30	5 3/16	-.005	5 5/8	1 1/8	7 11/16	17.6
22332K	23232K	SNW-132	S-132	AN-32	W-32	5 7/16	-.005	5 59/64	1 3/16	8 1/16	18.5
22334K	23234K	SNW-134	S-134	AN-34	W-34	5 15/16	-.005	6 3/16	1 7/32	8 21/32	21.0
22336K	23236K	SNW-136	S-136	AN-36	W-36	6 7/16	-.005	6 29/64	1 1/4	9 1/16	22.5
22338K	23238K	SNW-138	S-138	AN-38	W-38	6 15/16	-.005	6 3/4	1 9/32	9 15/32	28.0
22340K	23240K	SNW-140	S-140	AN-40	W-40	7 3/16	-.005	7 3/32	1 11/32	9 27/32	36.0
22344K	23244K	SNW-144	S-144	N-044	W-44	7 15/16	-.005	7 9/32	1 3/8	11	47.0
22348K	23248K	SNP-148	S-148	N-048	P-48	8 15/16	-.006	8 7/64	1 11/32	11 7/16	38.3
22352K	23252K	SNP-152	S-152	N-052	P-52	9 7/16	-.006	8 49/64	1 13/32	12 13/16	53.4
22356K	23256K	SNP-3256	S-3256	N-056	P-56	10 7/16	-.007	8 15/16	1 1/2	13	61.3
SERIES 231K											
23122K		SNW-3122	S-22	N-022	W-022	3 15/16	-.004	3 13/64	25/32	5 5/32	4.2
23124K		SNW-3124	S-24	N-024	W-024	4 3/16	-.005	3 15/32	13/16	5 11/16	5.8
23126K		SNW-3126	S-26	N-026	W-026	4 7/16	-.005	3 49/64	7/8	6 1/8	8.3
23128K		SNW-3128	S-28	N-028	W-028	4 15/16	-.005	3 63/64	15/16	6 1/2	8.8
23130K		SNW-3130	S-30	N-030	W-030	5 3/16	-.005	4 15/64	31/32	7 1/8	13.7
23132K		SNW-3132	S-32	N-032	W-032	5 7/16	-.005	4 37/64	1 1/32	7 1/2	13.3
23134K		SNW-3134	S-34	N-034	W-034	5 15/16	-.005	4 27/32	1 1/16	7 7/8	16.1
23136K		SNW-3136	S-36	N-036	W-036	6 7/16	-.005	5 1/32	1 3/32	8 1/4	17.1
23138K		SNW-3138	S-38	N-038	W-038	6 15/16	-.005	5 17/64	1 1/8	8 11/16	19.7
23140K		SNW-3140	S-40	N-040	W-040	7 3/16	-.005	5 31/64	1 3/16	9 7/16	28.4
23144K		SNW-3144	S-44	N-044	W-044	7 15/16	-.005	5 29/32	1 1/4	10 1/4	28.1
23148K		SNP-3148	S-48	N-048	P-48	8 15/16	-.006	6 41/64	1 11/32	11 7/16	36.0
23152K		SNP-3152	S-52	N-052	P-52	9 7/16	-.006	7 19/32	1 13/32	12 3/16	39.0
23156K		SNP-3156	S-3156	N-056	P-56	10 7/16	-.007	7 49/64	1 1/2	13	60.0
23160K		SNP-3160	S-3160	N-060	P-60	10 15/16	-.007	8 3/8	1 9/16	14 3/16	65.0
23164K		SNP-3164	S-3164	N-064	P-64	11 15/16	-.007	9 7/64	1 21/32	15	70.0

B

INCH SHAFT ADAPTER ACCESSORIES FOR TAPERED BORE BEARINGS

PUSH TYPE REMOVABLE SLEEVE, LOCKNUT AND LOCKWASHER

- The chart below shows dimensions for adapter assemblies and components used in the tapered bore bearings on shafts.

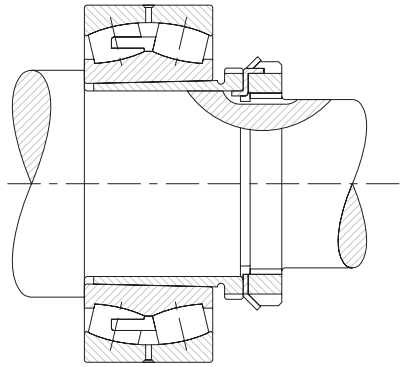

Bearing Number	Accessory Numbers				Shaft Dimensions		Adapter Dimensions				Sleeve Weight
	Sleeve	Locknut	Lockwasher Lockplate	Removal Nut	d Diameter	Tolerance +.00mm +.000" To	B Pitch Diameter	L	a	C Removal Nut O.D.	
					mm in.	mm in.	mm in.	mm in.	mm in.	mm in.	kg. lbs.
SERIES 222K											
22216K	SK-8022	N-14	W-14	AN-18	70 2.7559	–.10 –.004	88.19 3.472	50 1.969	3.50 0.138	118.39 4.661	0.5 1.2
22217K	SK-8522	AN-15	W-15	AN-19	75 2.9528	–.10 –.004	93.35 3.675	52 2.047	3.50 0.138	125.55 4.943	0.6 1.4
22218K	SK-9022	AN-16	W-16	AN-20	80 3.1496	–.10 –.004	98.12 3.863	53 2.087	3.50 0.138	131.90 5.193	0.6 1.5
22219K	SK-9522	AN-17	W-17	AN-21	85 3.3465	–.10 –.004	103.28 4.066	57 2.244	4.00 0.157	138.25 5.443	0.8 1.8
22220K	SK-10022	AN-18	W-18	AN-22	90 3.5433	–.10 –.004	109.12 4.269	59 2.323	4.00 0.157	145.39 5.724	0.9 2.0
22222K	SK-11022	AN-20	W-20	ARN-22	100 3.9370	–.10 –.004	119.94 4.722	65 2.559	4.00 0.157	158.75 6.250	1.1 2.4
22224K	SK-12022	AN-22	W-22	ARN-24	110 4.3307	–.13 –.005	130.28 5.129	72 2.835	4.00 0.157	174.63 6.875	1.4 3.1
22226K	SK-13022	AN-22	W-22	ARN-26	115 4.5276	–.13 –.005	141.38 5.566	78 3.071	4.00 0.15.7	184.15 7.250	2.2 5.0
22228K	SK-14022	AN-24	W-24	RN-28	125 4.9213	–.13 –.005	152.73 6.013	82 3.228	5.00 0.197	200.03 7.875	2.6 5.8
22230K	SK-15022	AN-26	W-26	RN-30	135 5.3150	–.13 –.005	163.04 6.419	88 3.465	5.00 0.197	209.55 8.250	3.0 6.8
22232K	SK-16022	AN-28	W-28	RN-32	140 5.5118	–.13 –.005	173.76 6.841	96 3.780	5.00 0.197	225.43 8.875	4.5 9.9
22234K	SK-17022	AN-30	W-30	RN-34	150 5.9055	–.13 –.005	184.07 7.247	104 4.095	5.00 0.197	234.95 9.250	5.2 11.5
22236K	SK-18022	AN-32	W-32	RN-36	160 6.2992	–.13 –.005	194.79 7.669	104 4.095	5.00 0.197	247.65 9.750	5.6 12.5
22238K	SK-19022	AN-34	W-34	RN-38	170 6.6929	–.13 –.005	205.92 8.107	112 4.409	5.00 0.197	269.88 10.625	6.5 14.5
22240K	SK-20022	AN-36	W-36	N-044	180 7.0866	–.13 –.005	217.02 8.544	118 4.646	5.00 0.197	279.53 11.005	7.4 16.3
22244K	SK-22022	AN-40	W-40	N-048	200 7.8740	–.13 –.005	236.98 9.330	130 5.118	6.00 0.236	290.65 11.443	8.8 19.6
22248K	SK-24022	N-44	W-44	N-052	220 8.6614	–.15 –.006	256.03 10.080	144 5.669	6.00 0.236	309.70 12.193	11.0 24.3
22252K	SK-26022	N-048	P-48	N-056	240 9.4488	–.15 –.006	276.66 10.892	155 6.102	6.00 0.236	330.33 13.005	14.0 30.9
22256K	SK-28022	N-052	P-52	RN-56	260 10.2362	–.15 –.006	301.27 11.861	155 6.102	8.00 0.315	425.45 16.750	15.0 33.1
22260K	SK-30022	N-056	P-56	RN-60	280 11.0236	–.15 –.006	325.88 12.830	170 6.693	8.00 0.315	416.10 16.382	17.7 39.2
22264K	SK-32022	N-060	P-60	RN-64	300 11.8110	–.15 –.006	345.72 13.611	180 7.087	10.00 0.394	431.8 17.000	21.0 46.3

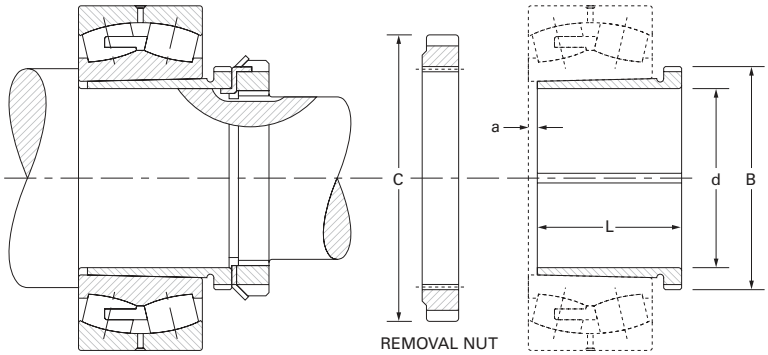

Tapered bore bearing mounted with push type removable sleeve.

Bearing Number	Accessory Numbers				Shaft Dimensions		Adapter Dimensions				Sleeve Weight
	Sleeve	Locknut	Lockwasher Lockplate	Removal Nut	d Diameter	Tolerance +.00mm +.000" To	B Pitch Diameter	L	a	C Removal Nut O.D.	
					mm in.	mm in.	mm in.	mm in.	mm in.	mm in.	kg. lbs.
SERIES 223K											
22308K	SK-4023	N-07	W-07	N-09	35 1.3780	–.08 –.003	43.94 1.730	40 1.575	3.00 0.118	64.41 2.536	0.1 0.2
22309K	SK-4523	N-08	W-08	N-10	40 1.5748	–.08 –.003	49.02 1.930	44 1.732	3.00 0.118	68.40 2.693	0.1 0.3
22310K	SK-5023	N-09	W-09	RN-10	45 1.7717	–.08 –.003	55.04 2.167	50 1.969	3.00 0.118	76.20 3.000	0.2 0.4
22311K	SK-5523	N-10	W-10	RN-11	50 1.9685	–.08 –.003	60.20 2.370	54 2.126	3.00 0.118	81.76 3.219	0.2 0.5
22312K	SK-6023	N-11	W-11	RN-12	55 2.1654	–.10 –.004	65.76 2.589	57 2.244	3.50 0.138	87.33 3.438	0.3 0.6
22313K	SK-6523	N-12	W-12	AN-15	60 2.3622	–.10 –.004	73.10 2.878	61 2.402	3.50 0.138	98.55 3.880	0.3 0.8
22314K	SK-7023	N-12	W-12	AN-16	60 2.3622	–.10 –.004	78.28 3.082	65 2.559	3.50 0.138	105.69 4.161	0.6 1.5
22315K	SK-7523	N-13	W-13	AN-17	65 2.5591	–.10 –.004	83.44 3.285	69 2.717	3.50 0.138	112.04 4.411	0.8 1.7
22316K	SK-8023	N-14	W-14	AN-18	70 2.7559	–.10 –.004	88.19 3.472	72 2.835	3.50 0.138	118.39 4.661	0.9 2.0
22317K	SK-8523	AN-15	W-15	AN-19	75 2.9528	–.10 –.004	93.35 3.675	75 2.953	3.50 0.138	125.55 4.943	1.0 2.2
22318K	SK-9023	AN-16	W-16	AN-20	80 3.1496	–.10 –.004	98.12 3.863	80 3.150	3.50 0.138	131.90 5.193	1.1 2.5
22319K	SK-9523	AN-17	W-17	AN-21	85 3.3465	–.10 –.004	103.28 4.066	85 3.346	4.00 0.157	138.25 5.443	1.3 2.9
22320K	SK-10023	AN-18	W-18	AN-22	90 3.5433	–.10 –.004	109.12 4.269	90 3.543	4.00 0.157	145.39 5.724	1.5 3.3
22322K	SK-11023	AN-20	W-20	ARN-22	100 3.9370	–.10 –.004	119.94 4.722	98 3.858	4.00 0.157	158.75 6.250	1.9 4.2
22324K	SK-12023	AN-22	W-22	ARN-24	110 4.3307	–.13 –.005	130.28 5.129	105 4.134	4.00 0.157	174.63 6.875	2.2 5.0
22326K	SK-13023	AN-22	W-22	ARN-26	115 4.5276	–.13 –.005	141.38 5.566	115 4.528	4.00 0.157	184.15 7.250	3.6 8.0
22328K	SK-14023	AN-24	W-24	RN-28	125 4.9213	–.13 –.005	152.73 6.013	125 4.921	5.00 0.197	200.03 7.875	4.3 9.5
22330K	SK-15023	AN-26	W-26	RN-30	135 5.3150	–.13 –.005	163.04 6.419	135 5.315	5.00 0.197	209.55 8.250	5.1 11.4
22332K	SK-16023	AN-28	W-28	RN-32	140 5.5118	–.13 –.005	173.76 6.841	140 5.512	6.00 0.236	225.43 8.875	7.0 15.5
22334K	SK-17023	AN-30	W-30	RN-34	150 5.9055	–.13 –.005	184.07 7.247	146 5.748	6.00 0.236	234.95 9.250	7.8 17.2
22336K	SK-18023	AN-32	W-32	RN-36	160 6.2992	–.13 –.005	194.79 7.669	154 6.063	6.00 0.236	247.65 9.750	9.1 20.2
22338K	SK-19023	AN-34	W-34	RN-38	170 6.6929	–.13 –.005	205.92 8.107	160 6.299	7.00 0.276	269.88 10.625	10.0 22.1
22340K	SK-20023	AN-36	W-36	N-044	180 7.0866	–.13 –.005	217.02 8.544	170 6.693	7.00 0.276	279.53 11.005	11.4 25.2
22344K	SK-22023	AN-40	W-40	N-048	200 7.8740	–.13 –.005	236.98 9.330	181 7.126	8.00 0.315	290.65 11.443	13.3 29.5
22348K	SK-24023	N-44	W-44	N-052	220 8.6614	–.15 –.006	256.03 10.080	189 7.441	8.00 0.315	309.70 12.193	15.5 34.2
22352K	SK-26023	N-048	P-48	N-056	240 9.4488	–.15 –.006	276.66 10.892	200 7.874	8.00 0.315	330.33 13.005	18.2 40.2
22356K	SK-28023	N-052	P-52	RN-56	260 10.2362	–.15 –.006	301.27 11.861	210 8.268	10.00 0.394	425.45 16.75	22.0 48.5

B

INCH SHAFT ADAPTER ACCESSORIES FOR STRAIGHT BORE BEARINGS

LOCKNUT AND LOCKWASHER

- The chart below shows dimensions for Locknuts and Lockwashers used in the mounting of straight bore bearings on shafts.
- Other dimensions and tolerances related to shaft configurations are also shown.
- Dimensions are presented according to bearing bore size and are applicable to bearings in the various series (e.g., 222 and 223 etc.).

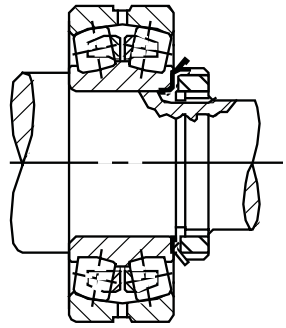

Bearing Bore	Locknut	Lockwasher	Threads Per Inch	Threads: Major Diameter Min.	Threads: Major Diameter Max.	Threads: Pitch Diameter Min.	Threads: Pitch Diameter Max.	Threads: Minor Dia.	Threads: A Relief Dia.
mm				mm in	mm in	mm in	mm in	mm in	mm in
35	N 07	W 07	18	34.740 1.3678	34.950 1.3760	33.930 1.3359	34.030 1.3399	33.220 1.3078	32.820 1.2922
40	N 08	W 08	18	39.490 1.5548	39.700 1.5630	38.670 1.5224	38.780 1.5269	37.970 1.4948	37.570 1.4792
45	N 09	W 09	18	44.670 1.7588	44.880 1.7670	43.850 1.7264	43.960 1.7309	43.150 1.6988	42.750 1.6832
50	N 10	W 10	18	49.750 1.9588	49.960 1.9670	48.930 1.9264	49.050 1.9309	48.230 1.8988	47.830 1.8832
55	N 11	W 11	18	54.580 2.1488	54.790 2.1570	53.740 2.1158	53.870 2.1209	53.060 2.0888	52.660 2.0732
60	N 12	W 12	18	59.740 2.3518	59.940 2.3600	58.900 2.3188	59.030 2.3239	58.210 2.2918	57.820 2.2762
65	N 13	W 13	18	64.510 2.5398	64.720 2.5480	63.670 2.5068	63.800 2.5119	62.990 2.4798	62.590 2.4642
70	N 14	W 14	18	69.670 2.7428	69.880 2.7510	68.830 2.7098	68.960 2.7149	68.140 2.6828	67.750 2.6672
75	AN 15	W 15	12	74.210 2.9218	74.500 2.9330	72.990 2.8735	73.120 2.8789	71.900 2.8308	71.110 2.7995
80	AN 16	W 16	12	79.400 3.1258	79.680 3.1370	78.160 3.0770	78.310 3.0829	77.080 3.0348	76.290 3.0035
85	AN 17	W 17	12	84.550 3.3288	84.840 3.3400	83.310 3.2800	83.460 3.2859	82.240 3.2378	81.450 3.2065
90	AN 18	W 18	12	89.300 3.5158	89.590 3.5270	88.020 3.4655	88.210 3.4729	86.990 3.4248	86.200 3.3935
95	AN 19	W 19	12	94.460 3.7188	94.740 3.7300	93.180 3.6685	93.370 3.6759	92.150 3.6278	91.350 3.5965
100	AN 20	W 20	12	99.230 3.9068	99.520 3.9180	97.960 3.8565	98.140 3.8639	96.920 3.8158	96.130 3.7845
105	AN 21	W 21	12	104.410 4.1108	104.700 4.1220	103.110 4.0596	103.320 4.0679	102.100 4.0198	101.310 3.9885
110	AN 22	W 22	12	109.570 4.3138	109.860 4.3250	108.270 4.2626	108.480 4.2709	107.260 4.2228	106.460 4.1915
120	AN 24	W 24	12	119.500 4.7048	119.790 4.7160	118.200 4.6536	118.410 4.6619	117.190 4.6138	116.400 4.5825
130	AN 26	W 26	12	129.410 5.0948	129.690 5.1060	128.110 5.0436	128.320 5.0519	127.100 5.0038	126.300 4.9725
140	AN 28	W 28	12	139.340 5.4858	139.620 5.4970	138.040 5.4346	138.250 5.4429	137.030 5.3948	136.230 5.3635
150	AN 30	W 30	12	149.270 5.8768	149.560 5.8880	147.970 5.8256	148.180 5.8339	146.960 5.7858	146.160 5.7545
160	AN 32	W 32	8	159.230 6.2688	159.610 6.2840	157.320 6.1937	157.550 6.2028	155.720 6.1306	154.920 6.0993
170	AN 34	W 34	8	168.750 6.6438	169.140 6.6590	166.850 6.5687	167.080 6.5778	165.240 6.5056	164.450 6.4743
180	AN 36	W 36	8	179.090 7.0508	179.480 7.0660	177.180 6.9757	177.410 6.9848	175.580 6.9126	174.790 6.8813
190	AN 38	W 38	8	189.400 7.4568	189.790 7.4720	187.500 7.3817	187.730 7.3908	185.890 7.3186	185.100 7.2873
200	AN 40	W 40	8	198.930 7.8318	199.310 7.8470	196.960 7.7544	197.250 7.7658	195.420 7.6936	194.620 7.6623
220	N 044	W 44	8	218.770 8.6128	219.150 8.6280	216.780 8.5347	217.090 8.5468	215.250 8.4746	214.460 8.4433

[1] See page 120 for suggested S-3 shaft limits.

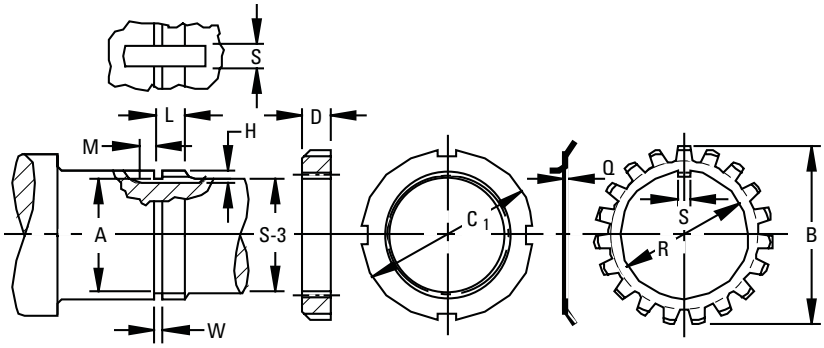

Shaft[2]						Locknut		Lockwasher			
S-3[1]	W 0 + 1/64	L 0 + 1/64	H 0 + 1/64	S 0 + 1/64	M 0 + 1/64	C_1	D	Q	R	B	S
mm in	mm in	mm in	mm in	mm in	mm in	mm in	mm in	mm in	mm in	mm in	mm in
31.750 1 1/4	2.4 3/32	12.7 1/2	2.4 3/32	4.8 3/16	3.2 1/8	52.39 2 1/16	11.40 0.448	1.30 0.050	36.00 1.416	57.20 2 1/4	4.50 0.176
36.510 1 7/16	3.2 1/8	13.5 17/32	2.4 3/32	7.9 5/16	3.2 1/8	57.15 2 1/4	11.40 0.448	1.50 0.058	40.70 1.603	62.70 2 15/32	7.40 0.290
42.860 1 11/16	3.2 1/8	13.5 17/32	2.4 3/32	7.9 5/16	4.0 5/32	64.30 2 17/32	11.40 0.448	1.50 0.058	46.20 1.817	69.50 2 47/64	7.40 0.290
47.630 1 7/8	3.2 1/8	15.1 19/32	2.4 3/32	7.9 5/16	4.0 5/32	68.30 2 11/16	13.00 0.510	1.50 0.058	51.20 2.017	74.20 2 59/64	7.40 0.290
52.390 2 1/16	3.2 1/8	15.1 19/32	3.2 1/8	7.9 5/16	4.0 5/32	75.40 2 31/32	13.00 0.510	1.60 0.063	56.10 2.207	79.00 3 7/64	7.40 0.290
57.150 2 1/4	3.2 1/8	15.9 5/8	3.2 1/8	7.9 5/16	4.0 5/32	80.20 3 5/32	13.70 0.541	1.60 0.063	61.60 2.425	85.00 3 11/32	7.40 0.290
61.910 2 7/16	3.2 1/8	16.7 21/32	3.2 1/8	7.9 5/16	4.0 5/32	85.70 3 3/8	14.60 0.573	1.60 0.063	66.40 2.613	90.90 3 37/64	7.40 0.290
66.680 2 5/8	3.2 1/8	16.7 21/32	3.2 1/8	7.9 5/16	6.4 1/4	92.10 3 5/8	14.60 0.573	1.60 0.063	71.50 2.816	97.20 3 53/64	7.40 0.290
71.440 2 13/16	4.0 5/32	17.5 11/16	3.2 1/8	7.9 5/16	6.4 1/4	98.40 3 7/8	15.30 0.604	1.60 0.072	76.30 3.003	104.40 4 7/64	7.40 0.290
76.200 3	4.0 5/32	17.5 11/16	3.2 1/8	9.5 3/8	6.4 1/4	105.60 4 5/32	15.30 0.604	1.80 0.072	81.50 3.207	111.10 4 3/8	9.00 0.353
80.960 3 3/16	4.0 5/32	16.7 21/32	3.2 1/8	9.5 3/8	6.4 1/4	111.90 4 13/32	16.10 0.635	1.80 0.072	87.00 3.425	117.50 4 5/8	9.00 0.353
85.730 3 3/8	4.0 5/32	20.6 13/16	4.0 5/32	9.5 3/8	6.4 1/4	118.30 4 21/32	17.70 0.698	2.40 0.094	91.70 3.612	125.40 4 15/16	9.00 0.353
90.490 3 9/16	4.0 5/32	21.4 27/32	4.0 5/32	9.5 3/8	6.4 1/4	125.40 4 15/16	18.50 0.729	2.40 0.094	97.30 3.830	132.60 5 7/32	9.00 0.353
96.840 3 13/16	4.0 5/32	22.2 7/8	4.0 5/32	9.5 3/8	7.9 5/16	131.80 5 3/16	19.30 0.760	2.40 0.094	102.10 4.018	139.70 5 1/2	9.00 0.353
100.010 3 15/16	4.0 5/32	22.2 7/8	4.0 5/32	9.5 3/8	7.9 5/16	138.10 5 7/16	19.30 0.760	2.40 0.094	107.20 4.222	144.90 5 45/64	9.00 0.353
106.360 4 3/16	4.0 5/32	23 29/32	4.8 3/16	9.5 3/8	7.9 5/16	145.30 5 23/32	20.10 0.791	3.20 0.125	112.40 4.425	154.00 6 1/16	9.00 0.353
115.890 4 9/16	4.0 5/32	23.8 15/16	4.8 3/16	9.5 3/8	7.9 5/16	155.60 6 1/8	20.90 0.823	3.20 0.125	122.70 4.831	164.30 6 15/32	9.00 0.353
125.410 4 15/16	4.0 5/32	25.4 1	4.8 3/16	12.7 1/2	7.9 5/16	171.50 6 3/4	22.50 0.885	3.20 0.125	132.70 5.226	178.60 7 1/32	11.10 0.435
134.940 5 5/16	4.0 5/32	27 1 1/16	4.8 3/16	15.9 5/8	7.9 5/16	180.20 7 3/32	24.10 0.948	3.20 0.125	142.70 5.617	188.90 7 7/16	15.00 0.590
146.050 5 3/4	4.0 5/32	28.6 1 1/8	5.6 7/32	15.9 5/8	9.5 3/8	195.30 7 11/16	24.90 0.979	4.00 0.156	152.90 6.018	204.80 8 1/16	15.00 0.590
153.990 6 1/16	6.4 1/4	30.2 1 3/16	6.0 15/64	15.9 5/8	9.5 3/8	204.80 8 1/16	26.40 1.041	4.00 0.156	163.20 6.424	214.30 8 7/16	15.00 0.590
163.510 6 7/16	6.4 1/4	31 1 7/32	6.0 15/64	19.1 3/4	9.5 3/8	219.90 8 21/32	27.30 1.073	4.00 0.156	172.70 6.799	230.20 9 1/16	18.20 0.715
174.630 6 7/8	6.4 1/4	31.8 1 1/4	6.0 15/64	19.1 3/4	9.5 3/8	230.20 9 1/16	28.00 1.104	4.00 0.156	183.00 7.206	239.70 9 7/16	18.20 0.715
184.150 7 1/4	6.4 1/4	35.5 1 3/32	6.0 15/64	19.1 3/4	9.5 3/8	240.50 9 15/32	28.80 1.135	4.00 0.156	193.30 7.612	250.80 9 7/8	18.20 0.715
193.680 7 5/8	6.4 1/4	34.1 1 11/32	6.0 15/64	22.2 7/8	9.5 3/8	250.00 9 27/32	30.40 1.198	4.00 0.156	203.60 8.017	261.90 10 5/16	21.30 0.840
211.140 8 5/16	6.4 1/4	34.9 1 3/8	9.5 3/8	27.0 1 1/16	9.5 3/8	279.40 11	31.80 1.250	3.20 0.125	221.10 8.703	290.50 11 7/16	23.90 0.940

[1] See page 120 for suggested S-3 shaft limits.
[2] For W, L, H, S, and M tolerance is -0 to +1/64 in, -0 to + 0.4mm.

INCH SHAFT ADAPTER ACCESSORIES FOR STRAIGHT BORE BEARINGS

LOCKNUT AND LOCKPLATE

- The chart below shows dimensions for Locknuts and Lockplates used in the mounting of straight bore bearings on shafts.
- Other dimensions and tolerances related to shaft configurations are also shown.
- Dimensions are presented according to bearing bore size and are applicable to bearings in the various series (e.g., 222,223 etc.).

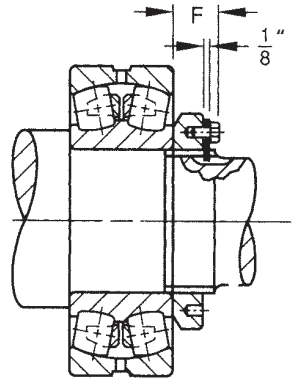

Bearing Bore	Locknut	Lockplate	Threads Per Inch	Threads: Major Diameter Min.	Threads: Major Diameter Max.	Threads: Pitch Diameter Min.	Threads: Pitch Diameter Max.	Threads: Minor Dia.	Threads: A Relief Dia.
mm				mm in	mm in	mm in	mm in	mm in	mm in
240	N 048	P 48	6	239.31 9.4218	239.83 9.442	236.76 9.3213	237.08 9.3337	234.63 9.2374	233.44 9.1905
260	N 052	P 52	6	258.36 10.1718	258.88 10.192	255.8 10.0707	256.13 10.0837	253.68 9.9874	252.49 9.9405
280	N 056	P 56	6	278.99 10.9838	279.50 11.004	276.42 10.8827	276.75 10.8957	274.31 10.7994	273.11 10.7525
300	N 060	P 60	6	298.83 11.7648	299.34 11.785	296.26 11.6637	296.59 11.6767	294.14 11.5804	292.95 11.5335
320	N 064	P 64	6	318.56 12.5418	319.08 12.562	315.98 12.4402	316.32 12.4537	313.88 12.3574	312.69 12.3105
340	N 068	P 68	5	337.49 13.287	337.90 13.303	334.95 13.187	335.36 13.203	332.31 13.083	331.11 13.036
360	N 072	P 72	5	358.60 14.118	359.00 14.134	356.06 14.018	356.46 14.034	353.42 13.914	352.22 13.867
380	N 076	P 76	5	378.59 14.905	378.99 14.921	376.05 14.805	376.45 14.821	373.41 14.701	372.21 14.654
400	N 080	P 80	5	398.60 15.693	399.01 15.709	396.06 15.593	396.47 15.609	393.42 15.489	392.23 15.442
420	N 084	P 84	5	418.59 16.480	419.00 16.496	416.05 16.380	416.46 16.396	413.41 16.276	412.22 16.229
440	N 088	P 88	5	438.58 17.267	438.99 17.283	436.05 17.167	436.45 17.183	433.40 17.063	432.21 17.016
460	N 092	P 92	5	458.60 18.055	459.00 18.071	456.06 17.955	456.46 17.971	453.42 17.851	452.22 17.804
480	N 096	P 96	5	478.59 18.842	478.99 18.858	476.05 18.742	476.45 18.758	473.41 18.638	472.21 18.591
500	N 500	P 500	5	498.60 19.630	499.01 19.646	496.06 19.530	496.47 19.546	493.42 19.426	492.23 19.379
530	N 530	P 530	4	528.50 20.807	529.01 20.827	525.32 20.682	525.83 20.702	522.15 20.557	520.55 20.494
560	N 560	P 560	4	558.50 21.988	559.00 22.008	555.32 21.863	555.83 21.883	552.15 21.738	550.55 21.675
600	N 600	P 600	4	598.50 23.563	599.01 23.583	595.33 23.438	595.83 23.458	592.15 23.313	590.55 23.250
630	N 630	P 630	4	628.50 24.744	629.01 24.764	625.32 24.619	625.83 24.639	622.15 24.494	520.55 24.431
670	N 670	P 670	4	668.50 26.319	669.01 26.339	665.33 26.194	665.84 26.214	662.15 26.069	660.55 26.006
710	N 710	P 710	3	708.33 27.887	709.02 27.914	704.09 27.720	704.77 27.747	700.02 27.56	698.42 27.497
750	N 750	P 750	3	748.34 29.462	749.02 29.489	744.09 29.295	744.78 29.322	740.03 29.135	738.43 29.072
800	N 800	P 800	3	798.32 31.430	799.01 31.457	794.08 31.263	794.77 31.290	790.02 31.103	788.42 31.040
850	N 850	P 850	3	848.34 33.399	849.02 33.426	844.09 33.232	844.78 33.259	840.03 33.072	838.43 33.009
900	N 900	P 900	3	898.32 35.367	899.01 35.394	894.08 35.200	894.77 35.227	890.02 35.040	888.42 34.977
950	N 950	P 950	3	948.33 37.336	949.02 37.363	944.09 37.169	944.78 37.196	940.03 37.009	938.43 36.946

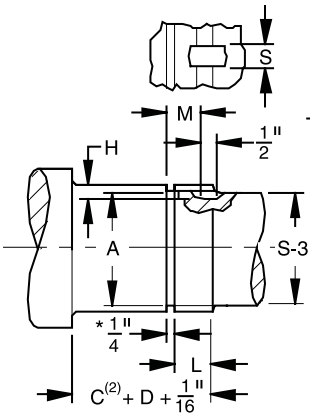

* Sizes N670 and above : 3/8 "

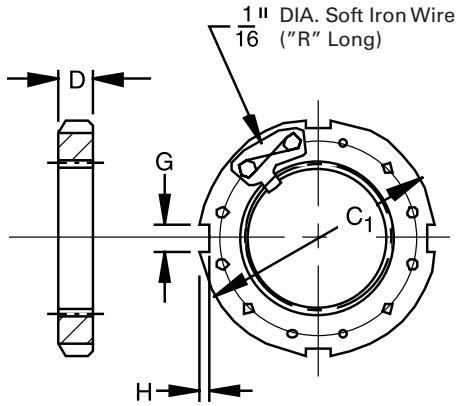

Shaft[3]					Locknut / Lockplate					
S-3[1]	L 0 +1/64	H 0 +1/64	S 0 +1/64	M 0 +1/64	C_1	D	G	H ±.25 mm ±.010"	R	F
mm in	mm in	mm in	mm in	mm in	mm in	mm in	mm in	mm in	mm in	mm in
233.36	42.86	11.1	28.6	34.9	290.5	34.1	22.48	9.5	203.2	43.26
9 3/16	1 11/16	7/16	1 1/8	1 3/8	11 7/16	1 11/32	0.885	3/8	8	1 45/64
252.41	45.24	11.1	30.2	37.3	309.6	35.7	22.48	9.5	228.6	44.85
9 15/16	1 25/32	7/16	1 3/16	1 15/32	12 3/16	1 13/32	0.885	3/8	9	1 49/64
273.05	47.63	11.1	31.8	39.7	330.2	38.1	25.65	9.5	228.6	47.23
10 3/4	1 7/8	7/16	1 1/4	1 9/16	13	1 1/2	1.010	3/8	9	1 55/64
292.1	49.21	11.1	34.9	41.3	360.4	39.7	25.65	12.7	254.0	50.01
11 1/2	1 15/16	7/16	1 3/8	1 5/8	14 3/16	1 9/16	1.010	1/2	10	1 31/32
312.74	51.59	11.1	36.5	43.7	381.0	42.1	25.65	12.7	254.0	52.39
12 5/16	2 1/32	7/16	1 7/16	1 23/32	15	1 21/32	1.010	1/2	10	2 1/16
331.79	56.36	11.1	38.1	48.4	400.1	45.2	25.65	12.7	279.4	55.56
13 1/16	2 7/32	7/16	1 1/2	1 29/32	15 3/4	1 25/32	1.010	1/2	11	2 3/16
350.84	56.36	12.7	38.1	48.4	419.1	45.2	32.00	12.7	279.4	55.56
13 13/16	2 7/32	1/2	1 1/2	1 29/32	16 1/2	1 25/32	1.260	1/2	11	2 3/16
371.48	59.53	12.7	38.1	51.59	450.9	48.4	32.00	15.1	304.8	61.12
14 5/8	2 11/32	1/2	1 1/2	2 1/32	17 3/4	1 29/32	1.260	19/32	12	2 13/32
390.53	63.50	12.7	41.3	55.6	469.9	52.4	32.00	15.1	330.2	65.09
15 3/8	2 1/2	1/2	1 5/8	2 3/16	18 1/2	2 1/16	1.260	19/32	13	2 9/16
411.16	63.50	12.7	41.3	55.6	490.5	52.4	35.18	15.1	330.2	65.09
16 3/16	2 1/2	1/2	1 5/8	2 3/16	19 5/16	2 1/16	1.385	19/32	13	2 9/16
431.80	71.44	12.7	46.0	63.50	520.7	60.3	35.18	15.1	355.6	75.41
17	2 13/16	1/2	1 13/16	2 1/2	20 1/2	2 3/8	1.385	19/32	14	2 31/32
450.85	71.44	12.7	46.0	63.50	539.8	60.3	35.18	15.1	406.4	75.41
17 3/4	2 13/16	1/2	1 13/16	2 1/2	21 1/4	2 3/8	1.385	19/32	16	2 31/32
469.9	71.44	12.7	46.0	63.50	560.4	60.3	38.35	15.1	406.4	75.41
18 1/2	2 13/16	1/2	1 13/16	2 1/2	22 1/16	2 3/8	1.510	19/32	16	2 31/32
489.0	79.4	12.7	46.0	71.4	579.4	68.3	38.35	15.1	406.4	83.3
19 1/4	3 1/8	1/2	1 13/16	2 13/16	22 13/16	2 11/16	1.510	19/32	16	3 3/32
517.5	79.4	12.7	46.0	71.4	630.2	68.3	41.53	20.6	425.5	83.3
20 3/8	3 1/8	1/2	1 13/16	2 13/16	24 13/16	2 11/16	1.635	13/16	16 3/4	3 3/32
549.3	85.7	12.7	46.0	77.8	649.3	74.6	41.53	20.6	476.3	89.7
21 5/8	3 3/8	1/2	1 13/16	3 1/16	25 5/16	2 15/16	1.635	13/16	18 3/4	3 17/32
587.4	85.7	12.7	46.0	77.8	700.1	74.6	41.53	20.6	508.0	89.7
23 1/8	3 3/8	1/2	1 13/16	3 1/16	27 9/16	2 15/16	1.635	13/16	20	3 17/32
619.1	85.7	12.7	50.8	77.8	730.3	74.6	47.88	20.6	520.7	92.1
24 3/8	3 3/8	1/2	2	3 1/16	28 3/4	2 15/16	1.885	13/16	20 1/2	3 5/8
657.2	90.5	12.7	50.8	82.6	779.5	79.4	47.88	20.6	546.1	96.8
25 7/8	3 9/16	1/2	2	3 1/4	30 11/16	3 1/8	1.885	13/16	21 1/2	3 13/16
695.3	101.6	15.9	50.8	93.7	830.3	90.5	51.30	25.4	571.5	108.0
27 3/8	4	5/8	2	3 11/16	32 11/16	3 9/16	2.020	1	22 1/2	4 1/4
736.6	101.6	15.9	50.8	93.7	870.0	90.5	57.66	25.4	584.2	108.0
29	4	5/8	2	3 11/16	34 1/4	3 9/16	2.270	1	23	4 1/4
787.4	101.6	15.9	50.8	93.7	920.8	90.5	57.66	25.4	616.0	108.0
31	4	5/8	2	3 11/16	36 1/4	3 9/16	2.270	1	24 1/4	4 1/4
835.0	101.6	15.9	50.8	93.7	979.5	90.5	64.01	25.4	647.7	108.0
32 7/8	4	5/8	2	3 11/16	38 9/16	3 9/16	2.520	1	25 1/2	4 1/4
885.8	111.1	15.9	50.8	103.2	1030.3	100.0	64.01	25.4	666.8	117.5
34 7/8	4 3/8	5/8	2	4 1/16	40 9/16	3 15/16	2.520	1	26 1/4	4 5/8
933.5	114.3	19.1	50.8	108	1092.2	100.0	64.01	25.4	692.2	117.5
36 3/4	4 1/2	3/4	2	4 1/4	43	3 15/16	2.520	1	27 1/4	4 5/8

[1] See page 120 for suggested S-3 shaft limits.

[2] C is outer ring width that may be obtained from bearing dimension tables.

[3] For L, H, S, and M tolerance is -0 to +1/64 in, -0 to + 0.4mm.

NOTES

SPHERICAL ROLLER BEARING METRIC ACCESSORIES

C

C SPHERICAL ROLLER BEARING METRIC ACCESSORIES

C

SPHERICAL ROLLER BEARING METRIC ACCESSORIES

C

SPHERICAL ROLLER BEARING METRIC ACCESSORIES

Overview: Spherical roller bearing accessories are manufactured to the same quality standards as our bearings, ensuring a secure fit to straight and stepped shafts.

- **Sizes:** Accessories are available for shaft sizes 25 mm to >900 mm.
- **Markets:** Conveyors, mining, pulp and paper, rolling mills, heavy movable structures.
- **Features:** Extensive product range, including hydraulic assist, for integration into a full range of industrial applications.
- **Benefits:** Supports full range of installation and removal needs, minimizing the chance for damage to the bearing.

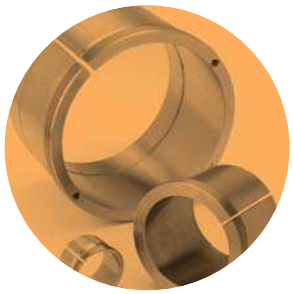

C

Accessories for your every need. To complement our line of Timken® spherical roller bearings, we offer bearing sleeves and locking devices in a wide range of metric sizes. These accessories are manufactured to the same quality standards as our bearings, ensuring a secure fit to straight and stepped shafts. Available in sizes up to 900mm, bearing sleeves are available in two distinct designs: assembled adapter sleeves and withdrawal sleeves.

ADAPTER SLEEVES

Timken adapter sleeves are used in conjunction with a nut and locking device to mount a tapered bore bearing onto a straight shaft using a pull-type fit. Smaller size assemblies (17 mm - 200 mm shaft) commonly use simple nuts, whereas larger assemblies (sizes >200 mm) may use HMV hydraulic nuts to assist in mounting. The chart below outlines our part number nomenclature, which is consistent with the world standards for adapter sleeves.

Sleeve	Locknut	Locking Device
H standard metric	KM	MB
OH hydraulic assist	HM	MB
	KML	MBL

WITHDRAWAL SLEEVES

Withdrawal sleeves feature a push-type mounting arrangement and a locking device (i.e., Locknut or Lockplate) to secure a bearing to a shaft. This design is not as widely used as the adapter sleeve assembly and it does require the use of a specially designed dismounting nut. Timken's part number nomenclature for withdrawal sleeves also conforms to industry-accepted standards.

Sleeve	Dismounting Nuts	Hydraulic Nut
AH standard metric	KM, HM	HMV
AOH hydraulic assist		

To learn more about our spherical roller bearing accessories, contact your Timken sales representative.

Spherical Roller Bearing Metric Accessories

C

Hydraulic Withdrawal Sleeves

Locknuts

Lockwashers and Lockplates

Adapter Sleeves

Hydraulic Adapter Sleeves

Withdrawal Sleeves

SPHERICAL ROLLER BEARING METRIC ACCESSORIES

C

INDEX TABLE

Tapered Bore Bearing No.		Applicable Adapter Series and Withdrawal Sleeve Series	
Self-Aligning Ball Bearings	Spherical Roller Bearings		
1204K - 1222K	—	Adapter Sleeves	H2
1304K - 1322K 2204K - 2222K	22208K - 22222K 21308K - 21322K		H3
2304K - 2322K	23218K - 23256K 22308K - 22356K		H 23 OH 23
—	23120K - 231/500K 22224K - 22264K		H 31 OH31
—	23260K - 232/500K		H 32 OH32
—	23024K - 230/500K		H 30 OH30
—	23936K - 239/500K		H 39 OH39
1208K - 1222K	—	Withdrawal Sleeves	AH 2
1308K - 1322K 2208K - 2220K	22208K - 22220K 21308K - 21322K		AH 3
2308K - 2322K	23244K - 23256K 22308K - 22356K		AH 23 AOH 23
2222K	23120K - 231/500K 22222K - 22234K		AH 31 AOH 31
—	23218K - 23240K 23260K - 232/500K		AH 32 AOH 32
—	22236K - 22264K		AH 22 AOH 22
—	23024K - 230/500K		AH 30 AOH 30
—	24024K - 240/500K		AH 240 AOH 240
—	24122K - 241/500K		AH 241 AOH 241
—	23936K- 239/500K		AH 39 AOH 39
Locknuts			KM, KML, HM, HML
Lockwashers and Lockplates			MB, MBL, MS31, MS30

ADAPTER SLEEVES

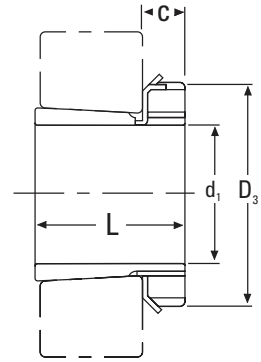

H 2

HE 2

HA 2

C

									TAPER 1:12
Adapter[1] No.	d_1 H	d_1 HE[2]	d_1 HA[3]	L	D_3	C	Lock Nuts	Lock Washers	Weight
	mm	in.	in.	mm	mm	mm			kg
H 204	17	—	—	24	32	7	KM 04	MB 04	0.041
H 205	20	3/4	—	26	38	8	KM 05	MB 05	0.070
H 206	25	1	15/16	27	45	8	KM 06	MB 06	0.099
H 207	30	—	1 3/16	29	52	9	KM 07	MB 07	0.125
H 208	35	1 1/4	1 5/16	31	58	10	KM 08	MB 08	0.174
H 209	40	1 1/2	1 7/16	33	65	11	KM 09	MB 09	0.227
H 210	45	1 3/4	1 11/16	35	70	12	KM 10	MB 10	0.274
H 211	50	2	1 15/16	37	75	12	KM 11	MB 11	0.308
H 212	55	—	—	38	80	13	KM 12	MB 12	0.346
H 213	60	2 1/4	2 3/16	40	85	14	KM 13	MB 13	0.401
H 214	60	—	—	41	92	14	KM 14	MB 14	0.593
H 215	65	2 1/2	2 7/16	43	98	15	KM 15	MB 15	0.707
H 216	70	2 3/4	2 11/16	46	105	17	KM 16	MB 16	0.882
H 217	75	3	2 15/16	50	110	18	KM 17	MB 17	1.020
H 218	80	—	3 3/16	52	120	18	KM 18	MB 18	1.190
H 219	85	3 1/4	—	55	125	19	KM 19	MB 19	1.370
H 220	90	3 1/2	3 7/16	58	130	20	KM 20	MB 20	1.490
H 221	95	—	—	60	140	20	KM 21	MB 21	1.720
H 222	100	4	3 15/16	63	145	21	KM 22	MB 22	1.930

(1) Adapter sleeves are supplied complete with Locknuts and Lockwasher or Lockplates.
(2) Adapters with bores for English standard shafts are designated HE, e.g. HE205.
(3) Adapters with bores for American standard shafts are designated HA, e.g. HA206.
Note: Sleeves are not sold separately.

ADAPTER SLEEVES-*continued*

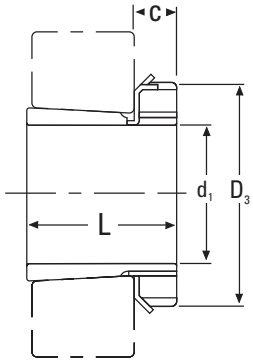

H 3

HE 3

HA 3

									TAPER 1:12
Adapter[1] No.	d_1 H	d_1 HE[2]	d_1 HA[3]	L	D_3	C	Lock Nuts	Lock Washers	Weight
	mm	in.	in.	mm	mm	mm			kg
H 304	17	—	—	28	32	7	KM 04	MB 04	0.045
H 305	20	3/4	—	29	38	8	KM 05	MB 05	0.075
H 306	25	1	15/16	31	45	8	KM 06	MB 06	0.109
H 307	30	—	1 3/16	35	52	9	KM 07	MB 07	0.142
H 308	35	1 1/4	1 5/16	36	58	10	KM 08	MB 08	0.189
H 309	40	1 1/2	1 7/16	39	65	11	KM 09	MB 09	0.248
H 310	45	1 3/4	1 11/16	42	70	12	KM 10	MB 10	0.303
H 311	50	2	1 15/16	45	75	12	KM 11	MB 11	0.345
H 312	55	—	—	47	80	13	KM 12	MB 12	0.394
H 313	60	2 1/4	2 3/16	50	85	14	KM 13	MB 13	0.458
H 314	60	—	—	52	92	14	KM 14	MB 14	0.723
H 315	65	2 1/2	2 7/16	55	98	15	KM 15	MB 15	0.831
H 316	70	2 3/4	2 11/16	59	105	17	KM 16	MB 16	1.030
H 317	75	3	2 15/16	63	110	18	KM 17	MB 17	1.180
H 318	80	—	3 3/16	65	120	18	KM 18	MB 18	1.370
H 319	85	3 3/4	—	68	125	19	KM 19	MB 19	1.560
H 320	90	3 1/2	3 7/16	71	130	20	KM 20	MB 20	1.690
H 321	95	—	—	74	140	20	KM 21	MB 21	1.950
H 322	100	4	3 15/16	77	145	21	KM 22	MB 22	2.180

(1) Adapter sleeves are supplied complete with Locknuts and Lockwasher or Lockplates.
(2) Adapters with bores for English standard shafts are designated HE, e.g. HE306.
(3) Adapters with bores for American standard shafts are designated HA, e.g. HA306.
Note: Sleeves are not sold separately.

ADAPTER SLEEVES-*continued*

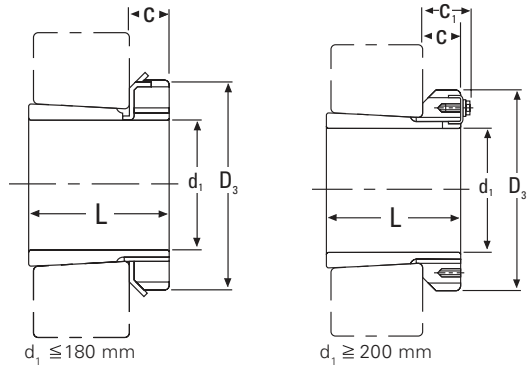

H 23

HE 23

HA 23

C

									TAPER 1:12
Adapter[1] No.	d_1 H	d_1 HE[2]	d_1 HA[3]	L	D_3	C	Lock Nuts	Lock Washers	Weight
	mm	in.	in.	mm	mm	mm			kg
H 2304	17	—	—	31	32	7	KM 04	MB 04	0.049
H 2305	20	3/4	—	35	38	8	KM 05	MB 05	0.087
H 2306	25	1	—	38	45	8	KM 06	MB 06	0.126
H 2307	30	—	—	43	52	9	KM 07	MB 07	0.165
H 2308	35	1 1/4	—	46	58	10	KM 08	MB 08	0.224
H 2309	40	1 1/2	1 7/16	50	65	11	KM 09	MB 09	0.280
H 2310	45	1 3/4	1 11/16	55	70	12	KM 10	MB 10	0.362
H 2311	50	2	1 15/16	59	75	12	KM 11	MB 11	0.420
H 2312	55	—	—	62	80	13	KM 12	MB 12	0.481
H 2313	60	2 1/4	2 3/16	65	85	14	KM 13	MB 13	0.557
H 2314	60	—	—	68	92	14	KM 14	MB 14	0.897
H 2315	65	2 1/2	2 7/16	73	98	15	KM 15	MB 15	1.050
H 2316	70	2 3/4	2 11/16	78	105	17	KM 16	MB 16	1.280
H 2317	75	3	2 15/16	82	110	18	KM 17	MB 17	1.450
H 2318	80	—	3 3/16	86	120	18	KM 18	MB 18	1.690
H 2319	85	3 3/4	—	90	125	19	KM 19	MB 19	1.920
H 2320	90	3 1/2	3 7/16	97	130	20	KM 20	MB 20	2.150
H 2322	100	4	3 15/16	105	145	21	KM 22	MB 22	2.740
H 2324	110	4 1/4	4 3/16	112	155	22	KM 24	MB 24	3.910
H 2326	115	4 1/2	4 7/16	121	165	23	KM 26	MB 26	4.600

(1) Adapter sleeves are supplied complete with Locknuts and Lockwasher or Lockplates.
(2) Adapters with bores for English standard shafts are designated HE, e.g. HE2305.
(3) Adapters with bores for American standard shafts are designated HA, e.g. HA2309.
Note: Sleeves are not sold separately.

ADAPTER SLEEVES-*continued*

H 23

HE 23

HA 23

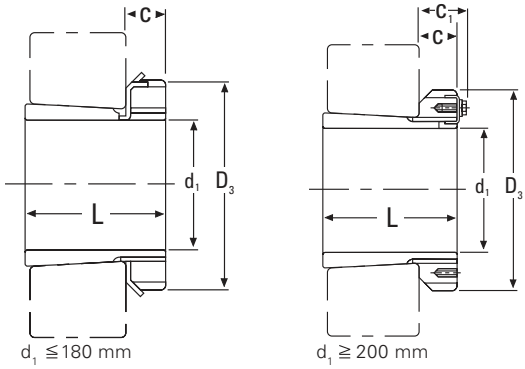

										TAPER 1:12
Adapter[1] No.	d_1 H	d_1 HE[2]	d_1 HA[3]	L	D_3	C	C_1 [4]	Locknuts	Lock Washer and Lockplates	Weight
	mm	in.	in.	mm	mm	mm	mm			kg
H 2328	125	5	4 15/16	131	180	24	—	KM 28	MB 28	5.550
H 2330	135	5 1/4	5 3/16	139	195	26	—	KM 30	MB 30	6.630
H 2332	140	5 1/2	5 7/16	147	210	28	—	KM 32	MB 32	9.140
H 2334	150	6	5 15/16	154	220	29	—	KM 34	MB 34	10.200
H 2336	160	6 1/2	6 7/16	161	230	30	—	KM 36	MB 36	11.300
H 2338	170	6 3/4	6 15/16	169	240	31	—	KM 38	MB 38	12.600
H 2340	180	7	7 3/16	176	250	32	—	KM 40	MB 40	13.900
H 2344	200	—	—	183	280	32	44	HM3144	MS3144	16.700
H 2348	220	—	—	196	300	34	46	HM3148	MS3148	19.700
H 2352	240	—	—	208	330	36	49	HM3152	MS3152	24.200
H 2356	260	—	—	221	350	38	51	HM3156	MS3156	27.800

(1) Adapter sleeves are supplied complete with Locknuts and Lockwasher or MS Lockplates.
(2) Adapters with bores for English standard shafts are designated HE, e.g. HE2328.
(3) Adapters with bores for American standard shafts are designated HA, e.g. HA2328.
(4) Adapters with the dimension C_1 , on pages 147-155 have a locking device as shown in the illustration.
Note: Sleeves are not sold separately.

ADAPTER SLEEVES-*continued*

H 31

HE 31

HA 31

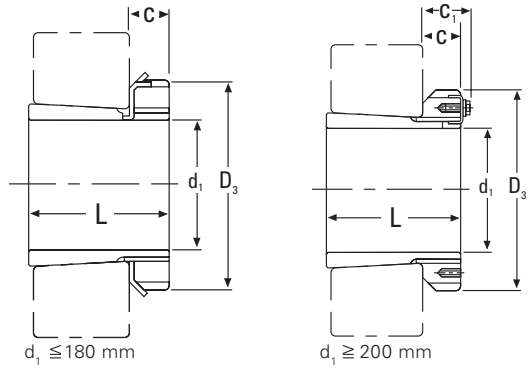

Adapter[1] No.	d1 H	d1 HE[2]	d1 HA[3]	L	D3	C	C1 [4]	Locknuts	Lockwashers and Lockplates	TAPER 1:12 Weight
	mm	in.	in.	mm	mm	mm	mm			kg
H 3120	90	3 1/2	3 7/16	76	130	20	—	KM 20	MB 20	1.800
H 3122	100	4	3 15/16	81	145	21	—	KM 22	MB 22	2.250
H 3124	110	4 1/4	4 3/16	88	155	22	—	KM 24	MB 24	2.640
H 3126	115	4 1/2	4 7/16	92	165	23	—	KM 26	MB 26	3.660
H 3128	125	5	4 15/16	97	180	24	—	KM 28	MB 28	4.340
H 3130	135	5 1/4	5 3/16	111	195	26	—	KM 30	MB 30	5.520
H 3132	140	5 1/2	5 7/16	119	210	28	—	KM 32	MB 32	7.670
H 3134	150	6	5 15/16	122	220	29	—	KM 34	MB 34	8.380
H 3136	160	6 1/2	6 7/16	131	230	30	—	KM 36	MB 36	9.500
H 3138	170	6 3/4	6 15/16	141	240	31	—	KM 38	MB 38	10.800
H 3140	180	7	7 3/16	150	250	32	—	KM 40	MB 40	12.100
H 3144	200	—	7 15/16	158	280	32	44	HM3144	MS3144	14.700
H 3148	220	—	—	169	300	34	46	HM3148	MS3148	17.300
H 3152	240	—	—	187	330	36	49	HM3152	MS3152	22.000
H 3156	260	—	—	192	350	38	51	HM3156	MS3156	24.500
H 3160	280	—	—	208	380	40	53	HM3160	MS3160	30.200
H 3164	300	—	—	226	400	42	56	HM3164	MS3164	34.900
H 3168	320	—	—	254	440	55	72	HM3168	MS3168	49.500
H 3172	340	—	—	259	460	58	75	HM3172	MS3172	54.200
H 3176	360	—	—	264	490	60	77	HM3176	MS3176	61.700
H 3180	380	—	—	272	520	62	82	HM3180	MS3180	70.600
H 3184	400	—	—	304	540	70	90	HM3184	MS3184	84.200
H 3188	410	—	—	307	560	70	90	HM3188	MS3188	104.000
H 3192	430	—	—	326	580	75	95	HM3192	MS3192	116.000
H 3196	450	—	—	335	620	75	95	HM3196	MS3196	133.000
H 31/500	470	—	—	356	630	80	100	HM31/500	MS31/500	143.000

(1) Adapter sleeves are supplied complete with Locknuts and Lockwasher or MS Lockplates.
(2) Adapters with bores for English standard shafts are designated HE, e.g. HE3120.
(3) Adapters with bores for American standard shafts are designated HA, e.g. HA3120.
(4) Adapters with the dimension C_1 have a locking device as shown in the illustration.
Note: Sleeves are not sold separately.

ADAPTER SLEEVES-*continued*

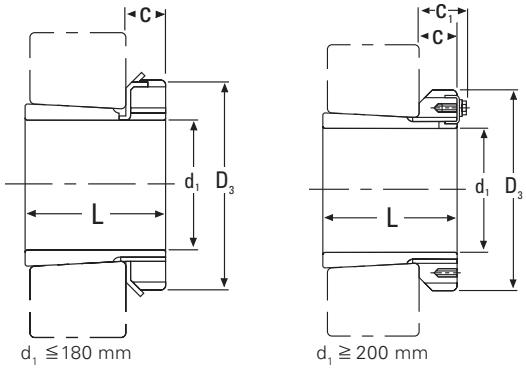

H 32

								TAPER 1:12
Adapter[1] No.	d_1	L	D_3	C	C_1 [2]	Locknuts	Lock Plates	Weight
	mm	mm	mm	mm	mm			kg
H 3260	280	240	380	40	53	HM3160	MS3160	34.100
H 3264	300	258	400	42	56	HM3164	MS3164	39.300
H 3268	320	288	440	55	72	HM3168	MS3168	54.600
H 3272	340	299	460	58	75	HM3172	MS3172	60.200
H 3276	360	310	490	60	77	HM3176	MS3176	69.600
H 3280	380	328	520	62	82	HM3180	MS3180	81.000
H 3284	400	352	540	70	90	HM3184	MS3184	94.000
H 3288	410	361	560	70	90	HM3188	MS3188	118.000
H 3292	430	382	580	75	95	HM3192	MS3192	132.000
H 3296	450	397	620	75	95	HM3196	MS3196	152.000
H 32/500	470	428	630	80	100	HM31/500	MS31/500	166.000

(1) Adapter sleeves are supplied complete with Locknuts and Lockplates.
(2) Adapters with the dimension C_1 have a locking device as shown in the illustration.

ADAPTER SLEEVES-*continued*

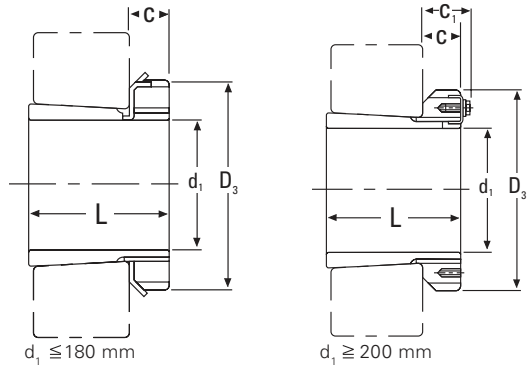

H 30

HE 30

HA 30

Adapter[1] No.	d1 H	d1 HE[2]	d1 HA[3]	L	D3	C	C1 [4]	Locknuts	Lockwashers and Lockplates	TAPER 1:12 Weight
	mm	in.	in.	mm	mm	mm	mm			kg
H 3024	110	4 1/4	4 3/16	72	145	22	—	KML 24	MBL 24	1.930
H 3026	115	4 1/2	4 7/16	80	155	23	—	KML 26	MBL 26	2.850
H 3028	125	5	4 15/16	82	165	24	—	KML 28	MBL 28	3.160
H 3030	135	5 1/4	5 3/16	87	180	26	—	KML 30	MBL 30	3.890
H 3032	140	5 1/2	5 7/16	93	190	28	—	KML 32	MBL 32	5.210
H 3034	150	6	5 15/16	101	200	29	—	KML 34	MBL 34	5.990
H 3036	160	6 1/2	6 7/16	109	210	30	—	KML 36	MBL 36	6.830
H 3038	170	6 3/4	6 15/16	112	220	31	—	KML 38	MBL 38	7.450
H 3040	180	7	7 3/16	120	240	32	—	KML 40	MBL 40	9.190
H 3044	200	—	7 15/16	128	260	30	41	HM3044	MS3044	10.300
H 3048	220	—	8 15/16	133	290	34	46	HM3048	MS3048	13.200
H 3052	240	—	9 7/16	147	310	34	46	HM3052	MS3052	15.300
H 3056	260	—	10 7/16	152	330	38	50	HM3056	MS3056	17.700
H 3060	280	—	10 15/16	168	360	42	54	HM3060	MS3060	22.800
H 3064	300	—	11 15/16	171	380	42	55	HM3064	MS3064	24.600
H 3068	320	—	12 7/16	187	400	45	58	HM3068	MS3068	28.700
H 3072	340	—	13 7/16	188	420	45	58	HM3072	MS3072	30.500
H 3076	360	—	13 15/16	193	450	48	62	HM3076	MS3076	35.800
H 3080	380	—	—	210	470	52	66	HM3080	MS3080	41.300
H 3084	400	—	—	212	490	52	66	HM3084	MS3084	43.700
H 3088	410	—	—	228	520	60	77	HM3088	MS3088	65.200
H 3092	430	—	—	234	540	60	77	HM3092	MS3092	69.500
H 3096	450	—	—	237	560	60	77	HM3096	MS3096	73.300
H 30/500	470	—	—	247	580	68	85	HM30/500	MS30/500	81.800

(1) Adapter sleeves are supplied complete with Locknuts and Lockwasher or Lockplates.
(2) Adapters with bores for English standard shafts are designated HE, (e.g. HE3024).
(3) Adapters with bores for American standard shafts are designated HA, (e.g. HA3024).
(4) Adapters with the dimension C_1 have a locking device as shown in the illustration.

ADAPTER SLEEVES-*continued*

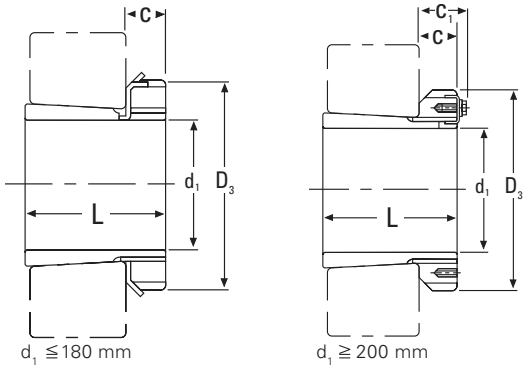

H 39

								TAPER 1:12
Adapter[1] No.	d_1	L	D_3	C	C_1 [2]	Lock Nuts	Lockwashers and Lockplates	Weight
	mm	mm	mm	mm	mm			kg
H 3936	160	87	210	29.5	—	KML 36	MBL 36	5.700
H 3938	170	89	220	30.5	—	KML 38	MBL 38	6.190
H 3940	180	98	240	31.5	—	KML 40	MBL 40	7.890
H 3944	200	96	260	30	41	HM3044	MS3044	8.160
H 3948	220	101	290	34	46	HM3048	MS3048	10.700
H 3952	240	116	310	34	46	HM3052	MS3052	12.800
H 3956	260	121	330	38	50	HM3056	MS3056	14.800
H 3960	280	140	360	42	54	HM3060	MS3060	19.800
H 3964	300	140	380	42	55	HM3064	MS3064	21.000
H 3968	320	144	400	45	58	HM3068	MS3068	23.500
H 3972	340	144	420	45	58	HM3072	MS3072	24.500
H 3976	360	164	450	48	62	HM3076	MS3076	31.500
H 3980	380	168	470	52	66	HM3080	MS3080	35.000
H 3984	400	168	490	52	66	HM3084	MS3084	36.600
H 3988	410	189	520	60	77	HM3088	MS3088	57.300
H 3992	430	189	540	60	77	HM3092	MS3092	59.900
H 3996	450	200	560	60	77	HM3096	MS3096	64.900
H 39/500	470	208	580	68	85	HM30/500	MS30/500	73.100

(1) Adapter sleeves are supplied complete with Locknuts and Lockwasher or Lockplates.
(2) Adapters with the dimension C_1 have a locking device as shown in the illustration.

HYDRAULIC ADAPTER SLEEVES

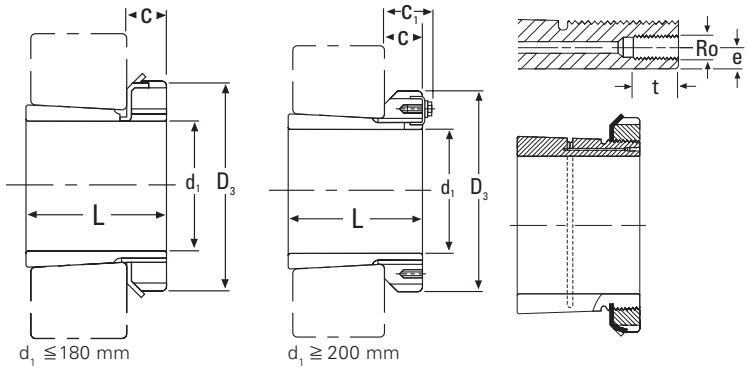

OH 23...H

											TAPER 1:12
Hydraulic Adapter[1] Sleeve No.	d_1 H	L	D_3	C	C_1 [2]	Ro	e	t	Lock Nuts	Lockwashers and Lockplates	Weight
	mm	mm	mm	mm	mm		mm	mm			kg
OH 2332 H	140	147	210	28	—	M6	4.0	7	KM 32	MB 32	9.140
OH 2334 H	150	154	220	29	—	M6	4.0	7	KM34	MB 34	10.200
OH 2336 H	160	161	230	30	—	M6	4.0	7	KM 36	MB 36	11.300
OH 2338 H	170	169	240	31	—	M6	4.0	7	KM 38	MB 38	12.600
OH 2340 H	180	176	250	32	—	M6	4.0	7	KM 40	MB 40	13.900
OH 2344 H	200	183	280	32	44	M6	4.0	7	HM3144	MS3144	16.700
OH 2348 H	220	196	300	34	46	M6	4.0	7	HM3148	MS3148	19.700
OH 2352 H	240	208	330	36	49	M6	4.0	7	HM3152	MS3152	24.200
OH 2356 H	260	221	350	38	51	M6	4.0	7	HM3156	MS3156	27.800

OH 32...H

											TAPER1:12
Hydraulic Adapter[1] Sleeve No.	d_1 H	L	D_3	C	C_1 [2]	Ro	e	t	Lock Nuts	Lock Plates	Weight
	mm	mm	mm	mm	mm		mm	mm			kg
OH 3260 H	280	240	380	40	53	M6	4.0	7	HM3160	MS3160	34.100
OH 3264 H	300	258	400	42	56	M6	3.5	7	HM3164	MS3164	39.300
OH 3268 H	320	288	440	55	72	M6	3.5	7	HM3168	MS3168	54.600
OH 3272 H	340	299	460	58	75	M6	3.5	7	HM3172	MS3172	60.200
OH 3276 H	360	310	490	60	77	M6	3.5	7	HM3176	MS3176	69.600
OH 3280 H	380	328	520	62	82	M6	3.5	7	HM3180	MS3180	81.000
OH 3284 H	400	352	540	70	90	M6	3.5	7	HM3184	MS3184	94.000
OH 3288 H	410	361	560	70	90	M8	6.5	12	HM3188	MS3188	118.000
OH 3292 H	430	382	580	75	95	M8	6.5	12	HM3192	MS3192	132.000
OH 3296 H	450	397	620	75	95	M8	6.5	12	HM3196	MS3196	152.000
OH 32/500 H	470	428	630	80	100	M8	6.5	12	HM31/500	MS31/500	166.000

(1) Hydraulic Adapter sleeves are supplied complete with Locknuts and Lockwasher or Lockplates.
(2) Adapters with the dimension C_1 have a locking device as shown in the illustration.

HYDRAULIC ADAPTER SLEEVES
-continued

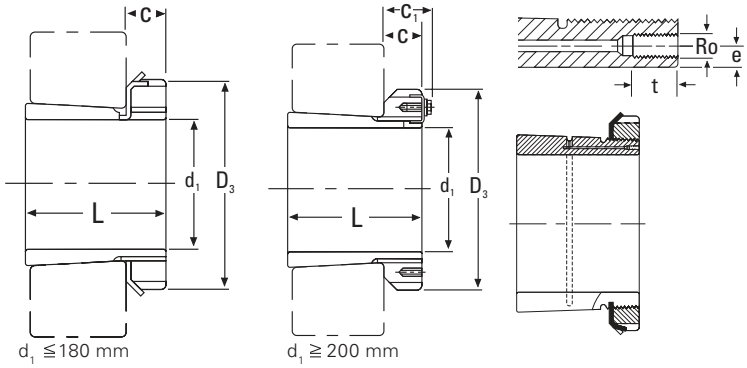

OH 31...H

											TAPER 1:12
Hydraulic Adapter(1) Sleeve No.	d_{H^1}	L	D_3	C	C_1 (2)	Ro	e	t	Lock Nuts	Lockwashers and Lockplates	Weight
	mm	mm	mm	mm	mm		mm	mm			kg
OH 3132 H	140	119	210	28	—	M6	4.0	7	KM 32	MB 32	7.670
OH 3134 H	150	122	220	29	—	M6	4.0	7	KM 34	MB 34	8.380
OH 3136 H	160	131	230	30	—	M6	4.0	7	KM 36	MB 36	9.500
OH 3138 H	170	141	240	31	—	M6	4.0	7	KM 38	MB 38	10.800
OH 3140 H	180	150	250	32	—	M6	4.0	7	KM 40	MB 40	12.100
OH 3144 H	200	158	280	32	44	M6	4.0	7	HM3144	MS3144	14.700
OH 3148 H	220	169	300	34	46	M6	4.0	7	HM3148	MS3148	17.300
OH 3152 H	240	187	330	36	49	M6	4.0	7	HM3152	MS3152	22.000
OH 3156 H	260	192	350	38	51	M6	4.0	7	HM3156	MS3156	24.500
OH 3160 H	280	208	380	40	53	M6	4.0	7	HM3160	MS3160	30.200
OH 3164 H	300	226	400	42	56	M6	3.5	7	HM3164	MS3164	34.900
OH 3168 H	320	254	440	55	72	M6	3.5	7	HM3168	MS3168	49.500
OH 3172 H	340	259	460	58	75	M6	3.5	7	HM3172	MS3172	54.200
OH 3176 H	360	264	490	60	77	M6	3.5	7	HM3176	MS3176	61.700
OH 3180 H	380	272	520	62	82	M6	3.5	7	HM3180	MS3180	70.600
OH 3184 H	400	304	540	70	90	M6	3.5	7	HM3184	MS3184	84.200
OH 3188 H	410	307	560	70	90	M8	6.5	12	HM3188	MS3188	104.000
OH 3192 H	430	326	580	75	95	M8	6.5	12	HM3192	MS3192	116.000
OH 3196 H	450	335	620	75	95	M8	6.5	12	HM3196	MS3196	133.000
OH 31/500 H	470	356	630	80	100	M8	6.5	12	HM31/500	MS31/500	143.000

(1) Hydraulic adapter sleeves are supplied complete with Locknuts and Lockwasher or Lockplates.
(2) Adapters with the dimension C_1 have a locking device as shown in the illustration.

HYDRAULIC ADAPTER SLEEVES
-continued

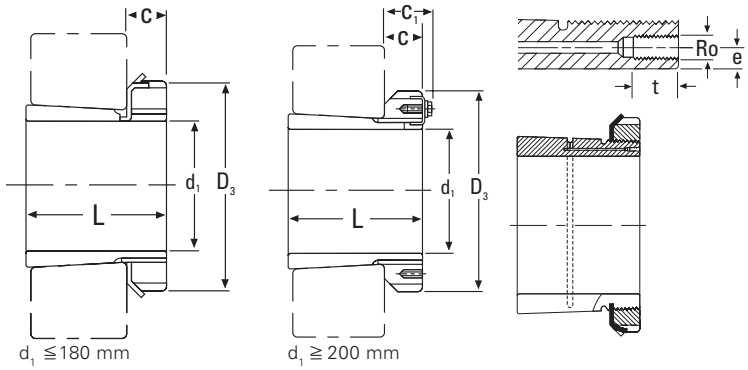

OH 30...H

											TAPER 1:12
Hydraulic Adapter[1] Sleeve No.	d_{H^1}	L	D_3	C	C_1 [2]	Ro	e	t	Lock Nuts	Lockwashers and Lockplates	Weight
	mm	mm	mm	mm	mm		mm	mm			kg
OH 3032 H	140	93	190	28	—	M6	4.0	7	KML 32	MBL 32	5.210
OH 3034 H	150	101	200	29	—	M6	4.0	7	KML 34	MBL 34	5.990
OH 3036 H	160	109	210	30	—	M6	4.0	7	KML 36	MBL 36	6.830
OH 3038 H	170	112	220	31	—	M6	4.0	7	KML 38	MBL 38	7.450
OH 3040 H	180	120	240	32	—	M6	4.0	7	KML 40	AWL 40	9.190
OH 3044 H	200	128	260	30	41	M6	4.0	7	HM3044	MS3044	10.300
OH 3048 H	220	133	290	34	46	M6	4.0	7	HM3048	MS3048	13.200
OH 3052 H	240	147	310	34	46	M6	4.0	7	HM3052	MS3052	15.300
OH 3056 H	260	152	330	38	50	M6	4.0	7	HM3056	MS3056	17.700
OH 3060 H	280	168	360	42	54	M6	4.0	7	HM3060	MS3060	22.800
OH 3064 H	300	171	380	42	55	M6	3.5	7	HM3064	MS3064	24.600
OH 3068 H	320	187	400	45	58	M6	3.5	7	HM3068	MS3068	28.700
OH 3072 H	340	188	420	45	58	M6	3.5	7	HM3072	MS3072	30.500
OH 3076 H	360	193	450	48	62	M6	3.5	7	HM3076	MS3076	35.800
OH 3080 H	380	210	470	52	66	M6	3.5	7	HM3080	MS3080	41.300
OH 3084 H	400	212	490	52	66	M6	3.5	7	HM3084	MS3084	43.700
OH 3088 H	410	228	520	60	77	M8	6.5	12	HM3088	MS3088	65.200
OH 3092 H	430	234	540	60	77	M8	6.5	12	HM3092	MS3092	69.500
OH 3096 H	450	237	560	60	77	M8	6.5	12	HM3096	MS3096	73.300
OH 30/500 H	470	247	580	68	85	M8	6.5	12	HM30/500	MS30/500	81.800

(1) Hydraulic adapter sleeves are supplied complete with Locknuts and Lockwasher or Lockplates.
(2) Adapters with the dimension C_1 have a locking device as shown in the illustration.

HYDRAULIC ADAPTER SLEEVES
-continued

OH39...H

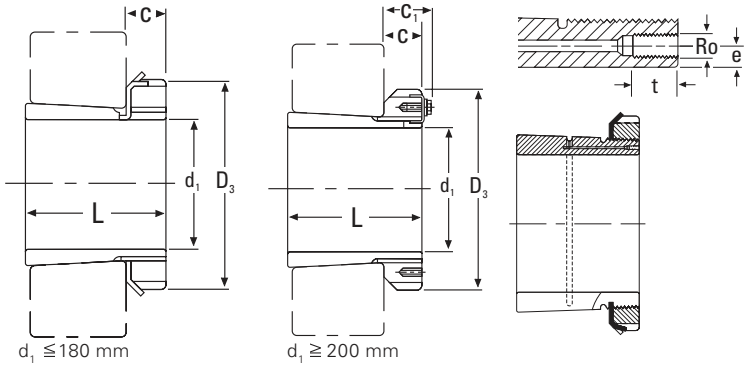

											TAPER 1:12
Hydraulic Adapter(1) Sleeve No.	d_{H^1}	L	D_3	C	C_1 (2)	Ro	e	t	Lock Nuts	Lockwashers and Lockplates	Weight
	mm	mm	mm	mm	mm		mm	mm			kg
OH 3936 H	160	87	210	29.5	—	M6	4.0	7	KML 36	MBL 36	5.700
OH 3938 H	170	89	220	30.5	—	M6	4.0	7	KML 38	MBL 38	6.190
OH 3940 H	180	98	240	31.5	—	M6	4.0	7	KML 40	MBL 40	7.890
OH 3944 H	200	96	260	30	41	M6	4.0	7	HM3044	MS3044	8.160
OH 3948 H	220	101	290	34	46	M6	4.0	7	HM3048	MS3048	10.700
OH 3952 H	240	116	310	34	46	M6	4.0	7	HM3052	MS3052	12.800
OH 3956 H	260	121	330	38	50	M6	4.0	7	HM3056	MS3056	14.800
OH 3960 H	280	140	360	42	54	M6	4.0	7	HM3060	MS3060	19.800
OH 3964 H	300	140	380	42	55	M6	3.5	7	HM3064	MS3064	21.000
OH 3968 H	320	144	400	45	58	M6	3.5	7	HM3068	MS3068	23.500
OH 3972 H	340	144	420	45	58	M6	3.5	7	HM3072	MS3072	24.500
OH 3976 H	360	164	450	48	62	M6	3.5	7	HM3076	MS3076	31.500
OH 3980 H	380	168	470	52	66	M6	3.5	7	HM3080	MS3080	35.000
OH 3984 H	400	168	490	52	66	M6	3.5	7	HM3084	MS3084	36.600
OH 3988 H	410	189	520	60	77	M8	6.5	12	HM3088	MS3088	57.300
OH 3992 H	430	189	540	60	77	M8	6.5	12	HM3092	MS3092	59.900
OH 3996 H	450	200	560	60	77	M8	6.5	12	HM3096	MS3096	64.900
OH 39/500 H	470	208	580	68	85	M8	6.5	12	HM30/500	MS30/500	73.100

(1) Hydraulic adapter sleeves are supplied complete with Locknuts and Lockwasher or Lockplates.
(2) Adapters with the dimension C_1 have a locking device as shown in the illustration.

WITHDRAWAL SLEEVES-*continued*

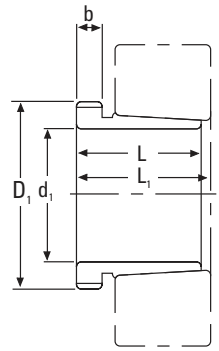

AH 2

							TAPER 1:12
Withdrawal Sleeve No.	d_1	L	L_1 (1)	b	Thread D_1	Appropriate Withdrawal Nut No.	Weight
	mm	mm	mm	mm	mm		kg
AH 208	35	25	27	6	M 45 x 1.5	KM 09	0.081
AH 209	40	26	29	6	M 50 x 1.5	KM 10	0.095
AH 210	45	28	31	7	M 55 x 2	KM 11	0.114
AH 211	50	29	32	7	M 60 x 2	KM 12	0.132
AH 212	55	32	35	8	M 65 x 2	KM 13	0.161
AH 213	60	32.5	36	8	M 75 x 2	KM 15	0.213
AH 214	65	33.5	37	8	M 80 x 2	KM 16	0.240
AH 215	70	34.5	38	8	M 85 x 2	KM 17	0.259
AH 216	75	35.5	39	8	M 90 x 2	KM 18	0.284
AH 217	80	38.5	42	9	M 95 x 2	KM 19	0.314
AH 218	85	40	44	9	M 100 x 2	KM 20	0.351
AH 219	90	43	47	10	M 105 x 2	KM 21	0.403
AH 220	95	45	49	10	M 110 x 2	KM 22	0.481
AH 222	100	50	54	11	M 120 x 2	KM 24	0.547

(1) Dimension L_1 decreases as the withdrawal sleeve is driven in during mounting.

WITHDRAWAL SLEEVES-*continued*

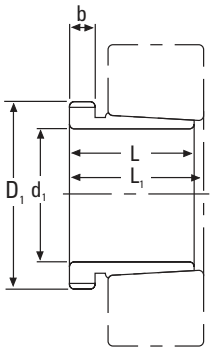

AH 3

							TAPER 1:12
Withdrawal Sleeve No.	d_1	L	L_1 (1)	b	Thread D_1	Appropriate Withdrawal Nut No.	Weight
	mm	mm	mm	mm	mm		kg
AH 308	35	29	32	6	M 45 x 1.5	KM 09	0.090
AH 309	40	31	34	6	M 50 x 1.5	KM 10	0.109
AHX 310	45	35	38	7	M 55 x 2	KM 11	0.137
AHX 311	50	37	40	7	M 60 x 2	KM 12	0.161
AHX 312	55	40	43	8	M 65 x 2	KM 13	0.189
AH 313	60	42	45	8	M 75 x 2	KM 15	0.253
AH 314	65	43	47	8	M 80 x 2	KM 16	0.280
AH 315	70	45	49	8	M 85 x 2	KM 17	0.313
AH 316	75	48	52	8	M 90 x 2	KM 18	0.365
AHX 317	80	52	56	9	M 95 x 2	KM 19	0.429
AHX 318	85	53	57	9	M 100 x 2	KM 20	0.461
AHX 319	90	57	61	10	M 105 x 2	KM 21	0.532
AHX 320	95	59	63	10	M 110 x 2	KM 22	0.582
AHX 322	100	63	67	12	M 120 x 2	KM 24	0.663

(1) Dimension L_1 decreases as the withdrawal sleeve is driven in during mounting.

WITHDRAWAL SLEEVES-*continued*

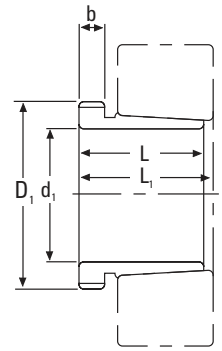

AH 23

							TAPER 1:12
Withdrawal Sleeve No.	d_1	L	L_1 (1)	b	Thread (2) D_1	Appropriate Withdrawal Nut No.	Weight
	mm	mm	mm	mm	mm		kg
AH 2308	35	40	43	7	M 45 x 1.5	KM 09	0.128
AH 2309	40	44	47	7	M 50 x 1.5	KM 10	0.164
AHX 2310	45	50	53	9	M 55 x 2	KM 11	0.209
AHX 2311	50	54	57	10	M 60 x 2	KM 12	0.253
AHX 2312	55	58	61	11	M 65 x 2	KM 13	0.297
AH 2313	60	61	64	12	M 75 x 2	KM 15	0.395
AHX 2314	65	64	68	12	M 80 x 2	KM 16	0.466
AHX 2315	70	68	72	12	M 85 x 2	KM 17	0.534
AHX 2316	75	71	75	12	M 90 x 2	KM 18	0.597
AHX 2317	80	74	78	13	M 95 x 2	KM 19	0.670
AHX 2318	85	79	83	14	M 100 x 2	KM 20	0.779
AHX 2319	90	85	89	16	M 105 x 2	KM 21	0.886
AHX 2320	95	90	94	16	M 110 x 2	KM 22	0.998
AHX 2322	105	98	102	16	M 125 x 2	KM 25	1.350
AHX 2324	115	105	109	17	M 135 x 2	KM 27	1.600
AHX 2326	125	115	119	19	M 145 x 3	KM 29	1.970
AHX 2328	135	125	130	20	M 155 x 3	KM 31	2.330
AHX 2330	145	135	140	24	M 165 x 2	KM 33	2.820
AH 2332	150	140	146	24	M 180 x 3	KM 36	4.720
AH 2334	160	146	152	24	M 190 x 3	KM 38	5.250
AH 2336	170	154	160	26	M 200 x 3	KM 40	5.830
AH 2338	180	160	167	26	Tr 210 x 4	HM 42	6.630
AH 2340	190	170	177	30	Tr 220 x 4	HM 44	7.540
AH 2344	200	181	189	30	Tr 240 x 4	HM 48	13.500
AH 2348	220	189	197	30	Tr 260 x 4	HM 52	15.500
AH 2352	240	205	213	30	Tr 290 x 4	HM 58	19.600
AH 2356	260	212	220	30	Tr 310 x 5	HM 62	21.600

(1) Dimension L_1 decreases as the withdrawal sleeve is driven in during mounting.
(2) Tr means 30°. Trapezoid thread and the digits are outside diameter of thread and pitch.

WITHDRAWAL SLEEVES-*continued*

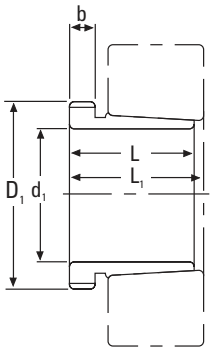

AH 31

							TAPER 1:12
Withdrawal Sleeve No.	d_1	L	L_1 (1)	b	Thread (2) D_1	Appropriate Withdrawal Nut No.	Weight
	mm	mm	mm	mm	mm		kg
AHX 3120	95	64	68	11	M 110 x 2	KM 22	0.650
AHX 3122	105	68	72	11	M 120 x 2	KM 24	0.760
AHX 3124	115	75	79	12	M 130 x 2	KM 26	0.950
AHX 3126	125	78	82	12	M 140 x 2	KM 28	1.080
AHX 3128	135	83	88	14	M 150 x 2	KM 30	1.280
AHX 3130	145	96	101	15	M 165 x 3	KM 33	1.790
AH 3132	150	103	108	16	M 180 x 3	KM 36	3.210
AH 3134	160	104	109	16	M 190 x 3	KM 38	3.400
AH 3136	170	116	122	19	M 200 x 3	KM 40	4.220
AH 3138	180	125	131	20	Tr 210 x 4	HM 42	4.890
AH 3140	190	134	140	21	Tr 220 x 4	HM 44	5.490
AH 3144	200	145	151	23	Tr 240 x 4	HM 48	10.400
AH 3148	220	154	161	25	Tr 260 x 4	HM 52	12.000
AH 3152	240	172	179	26	Tr 290 x 4	HM 58	16.200
AH 3156	260	175	183	28	Tr 310 x 5	HM 62	17.500
AH 3160	280	192	200	30	Tr 330 x 5	HM 66	20.800
AH 3164	300	209	217	31	Tr 350 x 5	HM 70	24.500
AH 3168	320	225	234	33	Tr 370 x 5	HM 74	29.000
AH 3172	340	229	238	35	Tr 400 x 5	HM 80	33.000
AH 3176	360	232	242	36	Tr 420 x 5	HM 84	35.700
AH 3180	380	240	250	38	Tr 440 x 5	HM 88	39.500
AH 3184	400	266	276	40	Tr 460 x 5	HM 92	46.500
AHX 3188	420	270	281	42	Tr 480 x 5	HM 96	49.800
AHX 3192	440	285	296	43	Tr 510 x 6	HM 102	57.900
AHX 3196	460	295	307	45	Tr 530 x 6	HM 106	63.100
AHX 31/500	480	313	325	47	Tr 550 x 6	HM 110	70.900

(1) Dimension L_1 decreases as the withdrawal sleeve is driven in during mounting.
(2) Tr means 30°. Trapezoid thread and the digits are outside diameter of thread and pitch.

WITHDRAWAL SLEEVES-*continued*

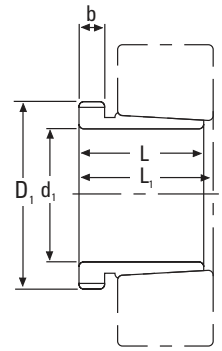

AH 32

							TAPER 1:12
Withdrawal Sleeve No.	d_1	L	L_1 (1)	b	Thread (2) D1	Appropriate Withdrawal Nut No.	Weight
	mm	mm	mm	mm	mm		kg
AHX 3218	85	63	67	10	M 100 x 2	MB 20	0.576
AHX 3220	95	73	77	11	M 110 x 2	MB 22	0.767
AHX 3222	105	82	86	11	M 125 x 2	MB 25	1.040
AHX 3224	115	90	94	13	M 135 x 2	MB 27	1.300
AHX 3226	125	98	102	15	M 145 x 2	MB 29	1.580
AHX 3228	135	104	109	15	M 155 x 2	MB 31	1.840
AHX 3230	145	114	119	17	M 165 x 3	MB 33	2.220
AH 3232	150	124	130	20	M 180 x 3	MB 36	4.080
AH 3234	160	134	140	24	M 190 x 3	MB 38	4.800
AH 3236	170	140	146	24	M 200 x 3	MB 40	5.320
AH 3238	180	145	152	25	Tr 210 x 4	HM 42	5.900
AH 3240	190	153	160	25	Tr 220 x 4	HM 44	6.680
AH 3260	280	228	236	34	Tr 330 x 5	HM 66	26.000
AH 3264	300	246	254	36	Tr 350 x 5	HM 70	30.600
AH 3268	320	264	273	38	Tr 370 x 5	HM 74	35.800
AH 3272	340	274	283	40	Tr 400 x 5	HM 80	41.600
AH 3276	360	284	294	42	Tr 420 x 5	HM 84	46.300
AH 3280	380	302	312	44	Tr 440 x 5	HM 88	52.500
AH 3284	400	321	331	46	Tr 460 x 5	HM 92	59.700
AHX 3288	420	330	341	48	Tr 480 x 5	HM 96	64.800
AHX 3292	440	349	360	50	Tr 510 x 6	HM 102	75.200
AHX 3296	460	364	376	52	Tr 530 x 6	HM 106	83.100
AHX 32/500	480	393	405	54	Tr 550 x 6	HM 110	94.700

(1) Dimension L_1 decreases as the withdrawal sleeve is driven in during mounting.
(2) Tr means 30°. Trapezoid thread and the digits are outside diameter of thread and pitch.

WITHDRAWAL SLEEVES-*continued*

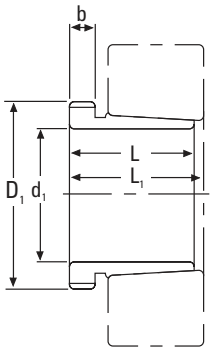

AH 22

							TAPER 1:12
Withdrawal Sleeve No.	d_1	L	L_1 (1)	b	Thread (2) D_1	Appropriate Withdrawal Nut No.	Weight
	mm	mm	mm	mm	mm		kg
AH 2236	170	105	110	17	M 200 x 3	MB 40	3.730
AH 2238	180	112	117	18	Tr 210 x 4	HM 42	4.250
AH 2240	190	118	123	19	Tr 220 x 4	HM 44	4.680
AH 2244	200	130	136	20	Tr 240 x 4	HM 48	9.100
AH 2248	220	144	150	21	Tr 260 x 4	HM 52	11.100
AH 2252	240	155	161	23	Tr 290 x 4	HM 58	14.000
AH 2256	260	155	163	24	Tr 310 x 5	HM 62	15.200
AH 2260	280	170	178	26	Tr 330 x 5	HM 66	18.100
AH 2264	300	180	190	27	Tr 350 x 5	HM 70	20.200

(1) Dimension L_1 decreases as the withdrawal sleeve is driven in during mounting.
(2) Tr means 30°. Trapezoid thread and the digits are outside diameter of thread and pitch.

WITHDRAWAL SLEEVES-*continued*

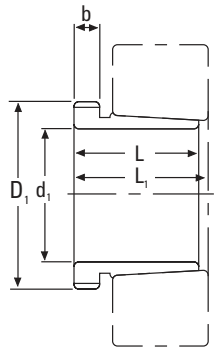

AH 30

							TAPER 1:12
Withdrawal Sleeve No.	d_1	L	L_1 (1)	b	Thread (2) D_1	Appropriate Withdrawal Nut No.	Weight
	mm	mm	mm	mm	mm		kg
AHX 3024	115	60	64	13	M 130 x 2	MB 26	0.750
AHX 3026	125	67	71	14	M 140 x 2	MB 28	0.930
AHX 3028	135	68	73	14	M 150 x 2	MB 30	1.010
AHX 3030	145	72	77	15	M 160 x 3	MB 32	1.150
AH 3032	150	77	82	16	M 170 x 3	MB 34	2.060
AH 3034	160	85	90	17	M 180 x 3	MB 36	2.430
AH 3036	170	92	98	17	M 190 x 3	MB 38	2.810
AH 3038	180	96	102	18	Tr 205 x 4	HML 41	3.320
AH 3040	190	102	108	19	Tr 215 x 4	HML 43	3.800
AH 3044	200	111	117	20	Tr 235 x 4	HML 47	7.400
AH 3048	220	116	123	21	Tr 260 x 4	HML 52	8.750
AH 3052	240	128	135	23	Tr 280 x 4	HML 56	10.700
AH 3056	260	131	139	24	Tr 300 x 4	HML 60	12.000
AH 3060	280	145	153	26	Tr 320 x 5	HML 64	14.400
AH 3064	300	149	157	27	Tr 345 x 5	HML 69	16.000
AH 3068	320	162	171	28	Tr 365 x 5	HML 73	19.500
AH 3072	340	167	176	30	Tr 385 x 5	HML 77	21.000
AH 3076	360	170	180	31	Tr 410 x 5	HML 82	23.200
AH 3080	380	183	193	33	Tr 430 x 5	HML 86	27.300
AH 3084	400	186	196	34	Tr 450 x 5	HML 90	29.000
AHX 3088	420	194	205	35	Tr 470 x 5	HML 94	32.000
AHX 3092	440	202	213	37	Tr 490 x 5	HML 98	35.200
AHX 3096	460	205	217	38	Tr 520 x 6	HML 104	39.200
AHX 30/500	480	209	221	40	Tr 540 x 6	HML 108	42.500

(1) Dimension L_1 decreases as the withdrawal sleeve is driven in during mounting.
(2) Tr means 30°. Trapezoid thread and the digits are outside diameter of thread and pitch.

WITHDRAWAL SLEEVES-*continued*

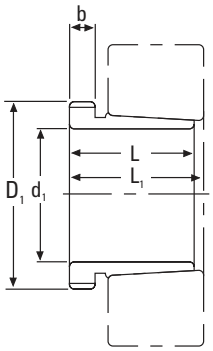

AH 240

							TAPER 1:12
Withdrawal Sleeve No.	d_1	L	L_1 (1)	b	Thread (2) D_1	Appropriate Withdrawal Nut No.	Weight
	mm	mm	mm	mm	mm		kg
AH 24024	115	73	82	13	M 125 x 2	KM 25	0.650
AH 24026	125	83	93	14	M 135 x 2	KM 27	0.840
AH 24028	135	83	93	14	M 145 x 2	KM 29	0.910
AH 24030	145	90	101	15	M 155 x 3	KM 31	1.040
AH 24032	150	95	106	15	M 170 x 3	KM 34	2.330
AH 24034	160	106	117	16	M 180 x 3	KM 36	2.800
AH 24036	170	116	127	16	M 190 x 3	KM 38	3.100
AH 24038	180	118	131	18	M 200 x 3	KM 40	3.500
AH 24040	190	127	140	18	Tr 210 x 4	HM 42	3.930
AH 24044	200	138	152	20	Tr 230 x 4	HM 46	8.250
AH 24048	220	138	153	20	Tr 250 x 4	HM 50	9.000
AH 24052	240	162	178	22	Tr 270 x 4	HM 54	11.800
AH 24056	260	162	179	22	Tr 290 x 4	HM 58	12.800
AH 24060	280	184	202	24	Tr 310 x 5	HM 62	15.500
AH 24064	300	184	202	24	Tr 330 x 5	HM 66	16.600
AH 24068	320	206	225	26	Tr 360 x 5	HML 72	21.700
AH 24072	340	206	226	26	Tr 380 x 5	HML 76	22.700
AH 24076	360	208	228	28	Tr 400 x 5	HML 80	23.700
AH 24080	380	228	248	28	Tr 420 x 5	HML 84	27.100
AH 24084	400	230	252	30	Tr 440 x 5	HML 88	29.000
AH 24088	420	242	264	30	Tr 460 x 5	HML 92	31.900
AH 24092	440	250	273	32	Tr 480 x 5	HML 96	34.700
AH 24096	460	250	273	32	Tr 500 x 5	HML 100	36.600
AH 240/500	480	253	276	35	Tr 530 x 6	HML 106	41.700

(1) Dimension L_1 decreases as the withdrawal sleeve is driven in during mounting.
(2) Tr means 30°. Trapezoid thread and the digits are outside diameter of thread and pitch.

WITHDRAWAL SLEEVES-*continued*

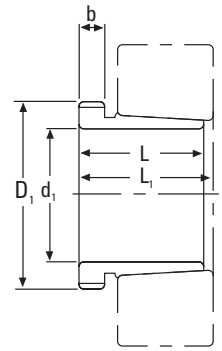

AH 241

							TAPER 1:12
Withdrawal Sleeve No.	d_1	L	L_1 (1)	b	Thread (2) D_1	Appropriate Withdrawal Nut No.	Weight
	mm	mm	mm	mm	mm		kg
AH 24122	105	82	91	13	M 115 x 2	KM 23	0.730
AH 24124	115	93	102	13	M 130 x 2	KM 26	1.000
AH 24126	125	94	104	14	M 140 x 2	KM 28	1.110
AH 24128	135	99	109	14	M 150 x 2	KM 30	1.250
AH 24130	145	115	126	15	M 160 x 3	KM 32	1.560
AH 24132	150	124	135	15	M 170 x 3	KM 34	3.000
AH 24134	160	125	136	16	M 180 x 3	KM 36	3.210
AH 24136	170	134	145	16	M 190 x 3	KM 38	3.680
AH 24138	180	146	159	18	M 200 x 3	KM 40	4.280
AH 24140	190	158	171	18	Tr 210 x 4	HM 42	5.100
AH 24144	200	170	184	20	Tr 230 x 4	HM 46	10.200
AH 24148	220	180	195	20	Tr 260 x 4	HM 52	12.500
AH 24152	240	202	218	22	Tr 280 x 4	HM 56	15.400
AH 24156	260	202	219	22	Tr 300 x 4	HM 60	16.300
AH 24160	280	224	242	24	Tr 320 x 5	HM 64	19.500
AH 24164	300	242	260	24	Tr 340 x 5	HM 68	21.400
AH 24168	320	269	288	26	Tr 360 x 5	HM 72	27.100
AH 24172	340	269	289	26	Tr 380 x 5	HM 76	29.600
AH 24176	360	271	291	28	Tr 400 x 5	HM 80	31.300
AH 24180	380	278	298	28	Tr 420 x 5	HM 84	34.400
AH 24184	400	310	332	30	Tr 440 x 5	HM 88	40.300
AH 24188	420	310	332	30	Tr 460 x 5	HM 92	42.300
AH 24192	440	332	355	32	Tr 480 x 5	HM 96	47.600
AH 24196	460	340	363	32	Tr 500 x 5	HM 100	52.700
AH 241/500	480	360	383	35	Tr 530 x 6	HM 106	59.100

(1) Dimension L_1 decreases as the withdrawal sleeve is driven in during mounting.
(2) Tr means 30°. Trapezoid thread and the digits are outside diameter of thread and pitch.

WITHDRAWAL SLEEVES-*continued*

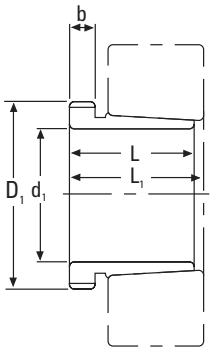

AH 39

							TAPER 1:12
Withdrawal Sleeve No.	d_1	L	L_1 (1)	b	Thread (2) D_1	Appropriate Withdrawal Nut No.	Weight
	mm	mm	mm	mm	mm		kg
AH 3936	170	66	71	13	M 190 x 3	KM 38	1.910
AH 3938	180	66	71	13	M 200 x 3	KM 40	2.020
AH 3940	190	77	83	16	Tr 210 x 4	HM 42	2.620
AH 3944	200	77	83	16	Tr 230 x 4	HM 46	4.830
AH 3948	220	77	83	16	Tr 250 x 4	HM 50	5.290
AH 3952	240	94	100	18	Tr 270 x 4	HM 54	7.060
AH 3956	260	94	100	18	Tr 290 x 4	HM 58	7.700
AH 3960	280	112	119	21	Tr 310 x 5	HM 62	10.100
AH 3964	300	112	119	21	Tr 330 x 5	HM 66	10.800
AH 3968	320	112	119	21	Tr 360 x 5	HML 72	12.400
AH 3972	340	112	119	21	Tr 380 x 5	HML 76	13.100
AH 3976	360	130	138	22	Tr 400 x 5	HML 80	15.900
AH 3980	380	130	138	22	Tr 420 x 5	HML 84	17.200
AH 3984	400	130	138	22	Tr 440 x 5	HML 88	18.100
AH 3988	420	145	153	25	Tr 460 x 5	HML 92	21.500
AH 3992	440	145	153	25	Tr 480 x 5	HML 96	22.500
AH 3996	460	158	167	28	Tr 500 x 6	HML 100	26.000
AH 39/500	480	162	172	32	Tr 530 x 6	HML 106	30.100

(1) Dimension L_1 decreases as the withdrawal sleeve is driven in during mounting.
(2) Tr means 30°. Trapezoid thread and the digits are outside diameter of thread and pitch.

HYDRAULIC WITHDRAWAL SLEEVES

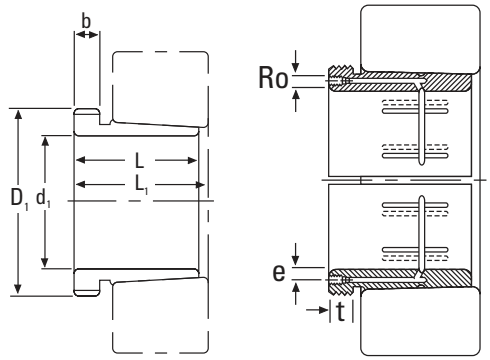

AOH 23

										TAPER 1:12
Hydraulic Withdrawal Sleeve No.	d_1	L	L_1 (1)	b	Ro	e	t	Thread (2) D_1	Appropriate Withdrawal Nut No.	Weight
	mm	mm	mm	mm		mm	mm	mm		kg
AOH 2332	150	140	146	24	M6	4.5	7	M 180 x 3	KM 36	4.720
AOH 2334	160	146	152	24	M6	4.5	7	M 190 x 3	KM 38	5.250
AOH 2336	170	154	160	26	M6	4.5	7	M 200 x 3	KM 40	5.830
AOH 2338	180	160	167	26	M6	4.5	7	Tr 210 x 4	HM 42	6.630
AOH 2340	190	170	177	30	M6	4.5	7	Tr 220 x 4	HM 44	7.540
AOH 2344	200	181	189	30	PT 1/8	8	12	Tr 240 x 4	HM 48	13.500
AOH 2348	220	189	197	30	PT 1/8	8	12	Tr 260 x 4	HM 52	15.500
AOH 2352	240	205	213	30	PT 1/8	8	12	Tr 290 x 4	HM 58	19.600
AOH 2356	260	212	220	30	PT 1/8	8	12	Tr 310 x 5	HM 62	21.600

(1) Dimension L_1 decreases as the hydraulic withdrawal sleeve is driven in during mounting.
(2) Tr means 30°. Trapezoid thread and the digits are outside diameter of thread and pitch.

HYDRAULIC WITHDRAWAL SLEEVES-*continued*

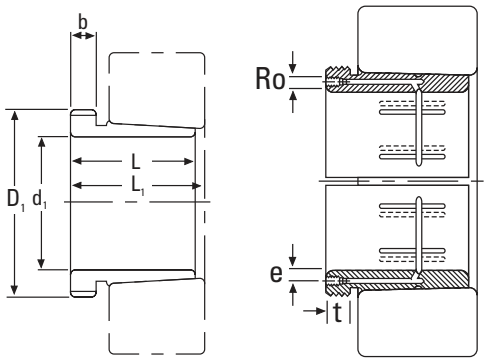

AOH 31

										TAPER 1:12
Hydraulic Withdrawal Sleeve No.	d_{H^1}	L	L_1 (1)	b	Ro	e	t	Thread (2) D_1	Appropriate Withdrawal Nut No.	Weight
	mm	mm	mm	mm		mm	mm			kg
AOH 3132	150	103	108	16	M6	4.5	7	M 180 x 3	KM 36	3.210
AOH 3134	160	104	109	16	M6	4.5	7	M 190 x 3	KM 38	3.400
AOH 3136	170	116	122	19	M6	4.5	7	M 200 x 3	KM 40	4.220
AOH 3138	180	125	131	20	M6	4.5	7	Tr 210 x 4	HM 42	4.890
AOH 3140	190	134	140	21	M6	4.5	7	Tr 220 x 4	HM 44	5.490
AOH 3144	200	145	151	23	PT 1/8	8	12	Tr 240 x 4	HM 48	10.400
AOH 3148	220	154	161	25	PT 1/8	8	12	Tr 260 x 4	HM 52	12.000
AOH 3152	240	172	179	26	PT 1/8	8	12	Tr 290 x 4	HM 58	16.200
AOH 3156	260	175	183	28	PT 1/8	8	12	Tr 310 x 4	HM 62	17.500
AOH 3160	280	192	200	30	PT 1/8	8	12	Tr 330 x 5	HM 66	20.800
AOH 3164	300	209	217	31	PT 1/8	8	12	Tr 350 x 5	HM 70	24.500
AOH 3168	320	225	234	33	PT 1/8	8	12	Tr 370 x 5	HM 74	29.000
AOH 3172	340	229	238	35	PT 1/8	8	12	Tr 400 x 5	HM 80	33.000
AOH 3176	360	232	242	36	PT 1/8	8	12	Tr 420 x 5	HM 84	35.700
AOH 3180	380	240	250	38	PT 1/8	8	12	Tr 440 x 5	HM 88	39.500
AOH 3184	400	266	276	40	PT 1/8	8	12	Tr 460 x 5	HM 92	46.500
AOH 3188	420	270	281	42	PT 1/8	8	12	Tr 480 x 5	HM 96	49.800
AOH 3192	440	285	296	43	PT 1/8	8	12	Tr 510 x 6	HM 102	57.900
AOH 3196	460	295	307	45	PT 1/8	8	12	Tr 530 x 6	HM 106	63.100
AOH 31/500	480	313	325	47	PT 1/8	8	12	Tr 550 x 6	HM 110	70.900

(1) Dimension L_1 decreases as the hydraulic withdrawal sleeve is driven in during mounting.
(2) Tr means 30°. Trapezoid thread and the digits are outside diameter of thread and pitch.

HYDRAULIC WITHDRAWAL SLEEVES-*continued*

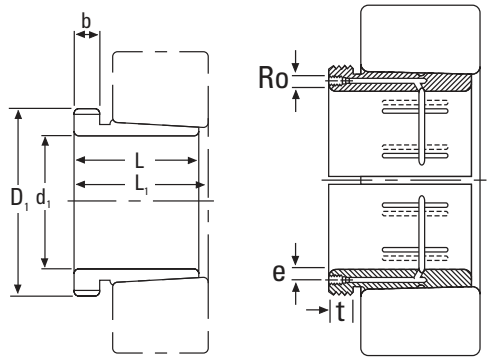

AOH 32

Hydraulic Withdrawal Sleeve No.	d_{H^1}	L	L_1 (1)	b	Ro	e	t	Thread (2) D_1	Appropriate Withdrawal Nut No.	TAPER 1:12 Weight
	mm	mm	mm	mm		mm	mm			kg
AOH 3232	150	124	130	20	M6	4.5	7	M 180 x 3	KM 36	4.080
AOH 3234	160	134	140	24	M6	4.5	7	M 190 x 3	KM 38	4.800
AOH 3236	170	140	146	24	M6	4.5	7	M 200 x 3	KM 40	5.320
AOH 3238	180	145	152	25	M6	4.5	7	Tr 210 x 4	HM 42	5.900
AOH 3240	190	153	160	25	M6	4.5	7	Tr 220 x 4	HM 44	6.680
AOH 3260	280	228	236	34	PT 1/8	8	12	Tr 330 x 5	HM 66	26.000
AOH 3264	300	246	254	36	PT 1/8	8	12	Tr 350 x 5	HM 70	30.600
AOH 3268	320	264	273	38	PT 1/8	8	12	Tr 370 x 5	HM 74	35.800
AOH 3272	340	274	283	40	PT 1/8	8	12	Tr 400 x 5	HM 80	41.600
AOH 3276	360	284	294	42	PT 1/8	8	12	Tr 420 x 5	HM 84	46.300
AOH 3280	380	302	312	44	PT 1/8	8	12	Tr 440 x 5	HM 88	52.500
AOH 3284	400	321	331	46	PT 1/8	8	12	Tr 460 x 5	HM 92	59.700
AOH 3288	420	330	341	48	PT 1/8	8	12	Tr 480 x 5	HM 96	64.800
AOH 3292	440	349	360	50	PT 1/8	8	12	Tr 510 x 6	HM 102	75.200
AOH 3296	460	364	376	52	PT 1/8	8	12	Tr 530 x 6	HM 106	83.100
AOH 32/500	480	393	405	54	PT 1/8	8	12	Tr 550 x 6	HM 110	94.700

(1) Dimension L_1 decreases as the hydraulic withdrawal sleeve is driven in during mounting.
(2) Tr means 30°. Trapezoid thread and the digits are outside diameter of thread and pitch.

HYDRAULIC WITHDRAWAL SLEEVES-*continued*

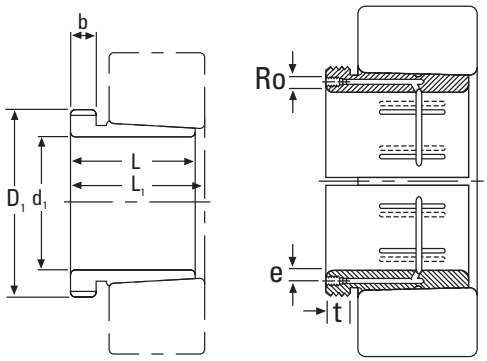

AOH 22

										TAPER 1:12
Hydraulic Withdrawal Sleeve No.	d_{H^1}	L	L_1 (1)	b	Ro	e	t	Thread (2) D_1	Appropriate Withdrawal Nut No.	Weight
	mm	mm	mm	mm		mm	mm			kg
AOH 2236	170	105	110	17	M6	4.5	7	M 200 x 3	KM 40	3.730
AOH 2238	180	112	117	18	M6	4.5	7	Tr 210 x 4	HM 42	4.250
AOH 2240	190	118	123	19	M6	4.5	7	Tr 220 x 4	HM 44	4.680
AOH 2244	200	130	136	20	PT 1/8	8	12	Tr 240 x 4	HM 48	9.100
AOH 2248	220	144	150	21	PT 1/8	8	12	Tr 260 x 4	HM 52	11.100
AOH 2252	240	155	161	23	PT 1/8	8	12	Tr 290 x 4	HM 58	14.000
AOH 2256	260	155	163	24	PT 1/8	8	12	Tr 310 x 4	HM 62	15.200
AOH 2260	280	170	178	26	PT 1/8	8	12	Tr 330 x 4	HM 66	18.100
AOH 2264	300	180	190	27	PT 1/8	8	12	Tr 350 x 4	HM 70	20.200

(1) Dimension L_1 decreases as the hydraulic withdrawal sleeve is driven in during mounting.
(2) Tr means 30°. Trapezoid thread and the digits are outside diameter of thread and pitch.

HYDRAULIC WITHDRAWAL SLEEVES-*continued*

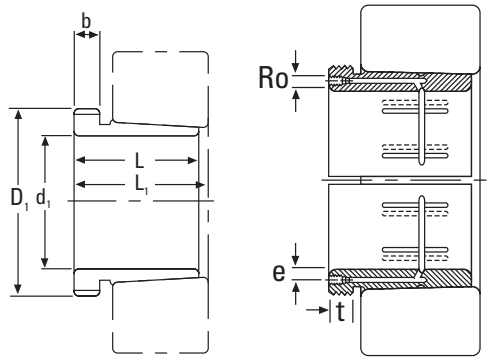

AOH 30

										TAPER 1:12
Hydraulic Withdrawal Sleeves No.	d_{H^1}	L	L_1 (1)	b	Ro	e	t	Thread (2) D_1	Appropriate Withdrawal Nut No.	Weight
	mm	mm	mm	mm		mm	mm			kg
AOH 3032	150	77	82	16	M6	4	7	M 170 x 3	KM 34	2.060
AOH 3034	160	85	90	17	M6	4	7	M 180 x 3	KM 36	2.430
AOH 3036	170	92	98	17	M6	4	7	M 190 x 3	KM 38	2.810
AOH 3038	180	96	102	18	M6	4	7	Tr 205 x 4	HML 41	3.320
AOH 3040	190	102	108	19	M6	4	7	Tr 215 x 4	HML 43	3.800
AOH 3044	200	111	117	20	PT 1/8	8	12	Tr 235 x 4	HML 47	7.400
AOH 3048	220	116	123	21	PT 1/8	8	12	Tr 260 x 4	HML 52	8.750
AOH 3052	240	128	135	23	PT 1/8	8	12	Tr 280 x 4	HML 56	10.700
AOH 3056	260	131	139	24	PT 1/8	8	12	Tr 300 x 4	HML 60	12.000
AOH 3060	280	145	153	26	PT 1/8	8	12	Tr 320 x 5	HML 64	14.400
AOH 3064	300	149	157	27	PT 1/8	8	12	Tr 345 x 5	HML 69	16.000
AOH 3068	320	162	171	28	PT 1/8	8	12	Tr 365 x 5	HML 73	19.500
AOH 3072	340	167	176	30	PT 1/8	8	12	Tr 385 x 5	HML 77	21.000
AOH 3076	360	170	180	31	PT 1/8	8	12	Tr 410 x 5	HML 82	23.200
AOH 3080	380	183	193	33	PT 1/8	8	12	Tr 430 x 5	HML 86	27.300
AOH 3084	400	186	196	34	PT 1/8	8	12	Tr 450 x 5	HML 90	29.000
AOH 3088	420	194	205	35	PT 1/8	8	12	Tr 470 x 5	HML 94	32.000
AOH 3092	440	202	213	37	PT 1/8	8	12	Tr 490 x 5	HML 98	35.200
AOH 3096	460	205	217	38	PT 1/8	8	12	Tr 520 x 6	HML 104	39.200
AOH 30/500	480	209	221	40	PT 1/8	8	12	Tr 540 x 6	HML 108	42.500

(1) Dimension L_1 decreases as the hydraulic withdrawal sleeve is driven in during mounting.
(2) Tr means 30°. Trapezoid thread and the digits are outside diameter of thread and pitch.

HYDRAULIC WITHDRAWAL SLEEVES-*continued*

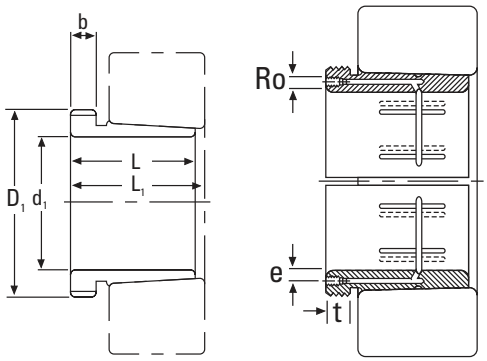

AOH 240

										TAPER 1:30
Hydraulic Withdrawal Sleeve No.	d_{H^1}	L	L_1 (1)	b	Ro	e	t	Thread (2) D_1	Appropriate Withdrawal Nut No.	Weight
	mm	mm	mm	mm		mm	mm			kg
AOH 24044	200	138	152	20	M6	8	7	Tr 230 x 4	HM 46	8.250
AOH 24048	220	138	153	20	M6	8	7	Tr 250 x 4	HM 50	9.000
AOH 24052	240	162	178	22	M6	8	7	Tr 270 x 4	HM 54	11.800
AOH 24056	260	162	179	22	M6	8	7	Tr 290 x 4	HM 58	12.800
AOH 24060	280	184	202	24	M6	8	7	Tr 310 x 5	HM 62	15.500
AOH 24064	300	184	202	24	M6	8	7	Tr 330 x 5	HM 66	16.600
AOH 24068	320	206	225	26	PT 1/8	8	12	Tr 360 x 5	HML 72	21.700
AOH 24072	340	206	226	26	PT 1/8	8	12	Tr 380 x 5	HML 76	22.700
AOH 24076	360	208	228	28	PT 1/8	8	12	Tr 400 x 5	HML 80	23.700
AOH 24080	380	228	248	28	PT 1/8	8	12	Tr 420 x 5	HML 84	27.100
AOH 24084	400	230	252	30	PT 1/8	8	12	Tr 440 x 5	HML 88	29.000
AOH 24088	420	242	264	30	PT 1/8	8	12	Tr 460 x 5	HML 92	31.900
AOH 24092	440	250	273	32	PT 1/8	8	12	Tr 480 x 5	HML 96	34.700
AOH 24096	460	250	273	32	PT 1/8	8	12	Tr 500 x 5	HML 100	36.600
AOH 240/500	480	253	276	35	PT 1/8	8	12	Tr 530 x 6	HML 106	43.900

(1) Dimension L_1 decreases as the hydraulic withdrawal sleeve is driven in during mounting.
(2) Tr means 30°. Trapezoid thread and the digits are outside diameter of thread and pitch.

HYDRAULIC WITHDRAWAL SLEEVES-*continued*

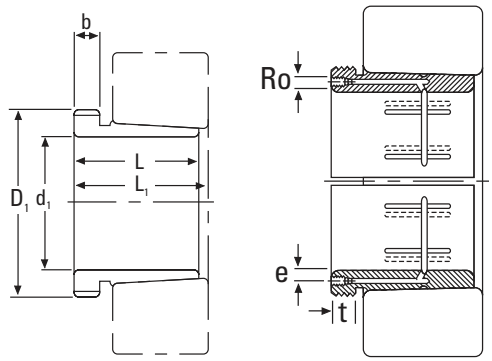

AOH 241

										TAPER 1:30
Hydraulic Withdrawal Sleeve No.	d_{H^1}	L	L_1 (1)	b	Ro	e	t	Thread (2) D_1	Appropriate Withdrawal Nut No.	Weight
	mm	mm	mm	mm		mm	mm			kg
AOH 24144	200	170	184	20	M6	8	7	Tr 230 x 4	HM 46	10.200
AOH 24148	220	180	195	20	PT 1/8	8	12	Tr 260 x 4	HM 52	12.500
AOH 24152	240	202	218	22	PT 1/8	8	12	Tr 280 x 4	HM 56	15.400
AOH 24156	260	202	219	22	PT 1/8	8	12	Tr 300 x 4	HM 60	16.300
AOH 24160	280	224	242	24	PT 1/8	8	12	Tr 320 x 5	HM 64	19.500
AOH 24164	300	242	260	24	PT 1/8	8	12	Tr 340 x 5	HM 68	21.400
AOH 24168	320	269	288	26	PT 1/8	8	12	Tr 360 x 5	HM 72	27.100
AOH 24172	340	269	289	26	PT 1/8	8	12	Tr 380 x 5	HM 76	29.600
AOH 24176	360	271	291	28	PT 1/8	8	12	Tr 400 x 5	HM 80	31.300
AOH 24180	380	278	298	28	PT 1/8	8	12	Tr 420 x5	HM 84	34.400
AOH 24184	400	310	332	30	PT 1/8	8	12	Tr 440 x 5	HM 88	40.300
AOH 24188	420	310	332	30	PT 1/8	8	12	Tr 460 x 5	HM 92	42.300
AOH 24192	440	332	355	32	PT 1/8	8	12	Tr 480 x 5	HM 96	47.600
AOH 24196	460	340	363	32	PT 1/8	8	12	Tr 500 x 5	HM 100	52.700
AOH 241/500	480	360	383	35	PT 1/8	8	12	Tr 530 x 6	HM 104	59.100

(1) Dimension L_1 decreases as the hydraulic withdrawal sleeve is driven in during mounting.
(2) Tr means 30°. Trapezoid thread and the digits are outside diameter of thread and pitch.

HYDRAULIC WITHDRAWAL SLEEVES-*continued*

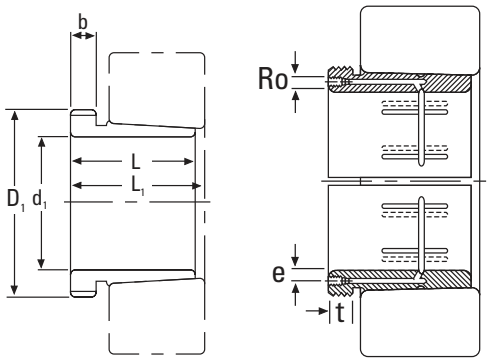

AOH 39

										TAPER 1:12
Hydraulic Withdrawal Sleeve No.	d 1 H	L	L_1 (1)	b	Ro	e	t	Thread (2) D_1	Appropriate Withdrawal Nut No.	Weight
	mm	mm	mm	mm		mm	mm			kg
AOH 3944	200	77	83	16	M8	7.5	12	Tr 230 x 4	HM 46	4.830
AOH 3948	220	77	83	16	M8	7.5	12	Tr 250 x 4	HM 50	5.290
AOH 3952	240	94	100	18	M8	7.5	12	Tr 270 x 4	HM 54	7.060
AOH 3956	260	94	100	18	M8	7.5	12	Tr 290 x 4	HM 58	7.070
AOH 3960	280	112	119	21	M8	7.5	12	Tr 310 x 5	HM 62	10.100
AOH 3964	300	112	119	21	M8	7.5	12	Tr 330 x 5	HM 66	10.800
AOH 3968	320	112	119	21	M8	7.5	12	Tr 360 x 5	HML 72	12.400
AOH 3972	340	112	119	21	M8	7.5	12	Tr 380 x 5	HML 76	13.100
AOH 3976	360	130	138	22	M8	7.5	12	Tr 400 x 5	HML 80	15.900
AOH 3980	380	130	138	22	M8	7.5	12	Tr 420 x 5	HML 84	17.200
AOH 3984	400	130	138	22	M8	7.5	12	Tr 440 x 5	HML 88	18.100
AOH 3988	420	145	153	25	PT 1/8	8	12	Tr 460 x 5	HML 92	21.500
AOH 3992	440	145	153	25	PT 1/8	8	12	Tr 480 x 5	HML 96	22.500
AOH 3996	460	158	167	28	PT 1/8	8	12	Tr 500 x 5	HML 100	26.000
AOH 39/500	480	162	172	32	PT 1/8	8	12	Tr 530 x 6	HML 106	30.100

(1) Dimension L_1 decreases as the hydraulic withdrawal sleeve is driven in during mounting.
(2) Tr means 30°. Trapezoid thread and the digits are outside diameter of thread and pitch.

LOCKNUTS

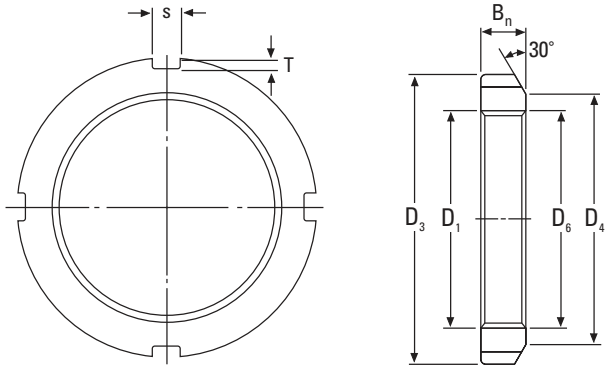

AN

KM

Locknut No.	D_1 Thread[1]	D_3	D_4	B_n	S	T	D_6	Weight	Lockwashers No.
		mm	mm	mm	mm	mm	mm	kg	
KM 00	M 10 X 0.75	18	13	4	3	2	10.5	0.005	MB 00
KM 01	M 12 X 1.0	22	17	4	3	2	12.5	0.007	MB 01
KM 02	M 15 X 1.0	25	21	5	4	2	15.5	0.010	MB 02
KM 03	M 17 X 1.0	28	24	5	4	2	17.5	0.013	MB 03
KM 04	M 20 X 1.0	32	26	6	4	2	20.5	0.019	MB 04
KM 05	M 25 X 1.5	38	32	7	5	2	25.8	0.025	MB 05
KM 06	M 30 X 1.5	45	38	7	5	2	30.8	0.043	MB 06
KM 07	M 35 X 1.5	52	44	8	5	2	35.8	0.053	MB 07
KM 08	M 40 X 1.5	58	50	9	6	2.5	40.8	0.085	MB 08
KM 09	M 45 X 1.5	65	56	10	6	2.5	45.8	0.119	MB 09
KM 10	M 50 X 1.5	70	61	11	6	2.5	50.8	0.148	MB 10
KM 11	M 55 X 2.0	75	67	11	7	3	56.0	0.158	MB 11
KM 12	M 60 X 2.0	80	73	11	7	3	61.0	0.174	MB 12
KM 13	M 65 X 2.0	85	79	12	7	3	66.0	0.203	MB 13
KM 14	M 70 X 2.0	92	85	12	8	3.5	71.0	0.242	MB 14
KM 15	M 75 X 2.0	98	90	13	8	3.5	76.0	0.287	MB 15
KM 16	M 80 X 2.0	105	95	15	8	3.5	81.0	0.397	MB 16
KM 17	M 85 X 2.0	110	102	16	8	3.5	86.0	0.451	MB 17
KM 18	M 90 X 2.0	120	108	16	10	4	91.0	0.556	MB 18
KM 19	M 95 X 2.0	125	113	17	10	4	96.0	0.658	MB 19
KM 20	M 100 X 2.0	130	120	18	10	4	101.0	0.698	MB 20
KM 21	M 105 X 2.0	140	126	18	12	5	106.0	0.845	MB 21
KM 22	M 110 X 2.0	145	133	19	12	5	111.0	0.965	MB 22
KM 23	M 115 X 2.0	150	137	19	12	5	116.0	1.010	MB 23
KM 24	M 120 X 2.0	160	148	21	12	5	126.0	1.800	MB 24
KM 25	M 125 X 2.0	160	148	21	12	5	126.0	1.190	MB 25
KM 26	M 130 X 2.0	165	149	21	12	5	131.0	1.250	MB 26
KM 27	M 135 X 2.0	175	160	22	14	6	136.0	1.550	MB 27
KM 28	M 140 X 2.0	180	160	22	14	6	141.0	1.560	MB 28

(1) M means metric thread and the digits are major diameter of thread and pitch.

LOCKNUTS-*continued*

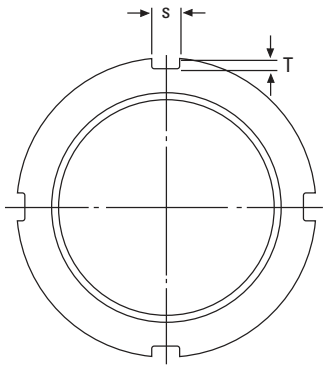

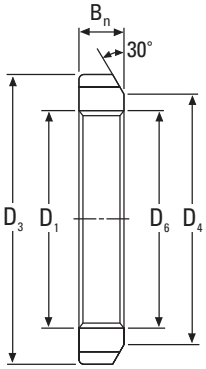

AN

KM

Locknut No.(2)	D_1 Thread(1)	D_3	D_4	B_n	S	T	D_6	Weight	Lockwashers No.
		mm	mm	mm	mm	mm	mm	kg	
KM 29	M145 X 2.0	190	172	24	14	6	146	2.000	MB 29
KM 30	M150 X 2.0	195	171	24	14	6	151	2.030	MB 30
KM 31	M155 X 3.0	200	182	25	16	7	156.5	2.210	MB 31
KM 32	M160 X 3.0	210	182	25	16	7	161.5	2.590	MB 32
KM 33	M165 X 3.0	210	193	26	16	7	166.5	2.430	MB 33
KM 34	M170 X 3.0	220	193	26	16	7	171.5	2.800	MB 34
KM 36	M180 X 3.0	230	203	27	18	8	181.5	3.070	MB 36
KM 38	M190 X 3.0	240	214	28	18	8	191.5	3.390	MB 38
KM 40	M200 X 3.0	250	226	29	18	8	201.5	3.690	MB 40

(1) M means metric thread and the digits are major diameter of thread and pitch.
(2) No. KM00 - KM40 also available for 304 stainless steel.

ANL

KML

Locknut No.(2)	D_1 Thread(1)	D_3	D_4	B_n	S	T	D_6	Weight	Lockwashers No.
		mm	mm	mm	mm	mm	mm	kg	
KML 24	M120 x 2.0	145	133	20	12	5	121	0.780	MBL 24
KML 26	M130 x 2.0	155	143	21	12	5	131	0.880	MBL 26
KML 28	M140 x 2.0	165	151	22	14	6	141	0.990	MBL 28
KML 30	M150 x 2.0	180	164	24	14	6	151	1.380	MBL 30
KML 32	M160 x 3.0	190	174	25	16	7	161.5	1.560	MBL 32
KML 34	M170 x 3.0	200	184	26	16	7	171.5	1.720	MBL 34
KML 36	M180 x 3.0	210	192	27	18	8	181.5	1.950	MBL 36
KML 38	M190 x 3.0	220	202	28	18	8	191.5	2.080	MBL 38
KML 40	M200 x 3.0	240	218	29	18	8	201.5	2.980	MBL 40

(1) M means metric thread and the digits are major diameter of thread and pitch.
(2) No. KML 24 - KML 40 also available for 304 stainless steel.

LOCKNUTS-*continued*

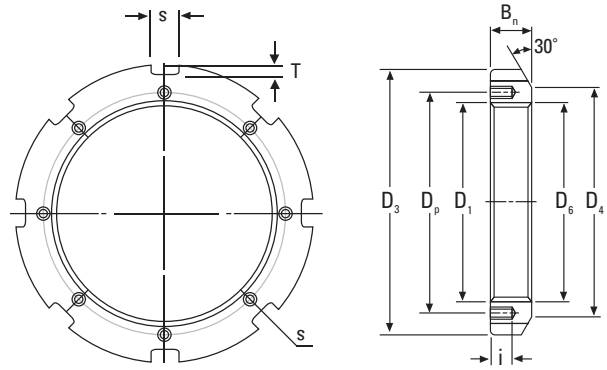

AN

HM 31

Locknut No.	D_1 Thread (1)	D_3	D_4	S	T	D_6	B_n	i	Tapped Holes Threads	D_p	Suitable Lockplates No.	Weight
		mm	mm	mm	mm	mm	mm	mm		mm		kg
HM3144	Tr 220 x 4	280	250	20	10	222	32	15	M 8 x 1.25	238	MS3144	5.200
HM3148	Tr 240 x 4	300	270	20	10	242	34	15	M 8 x 1.25	258	MS3148	5.950
HM3152	Tr 260 x 4	330	300	24	12	262	36	18	M 10 x 1.5	281	MS3152	8.050
HM3156	Tr 280 x 4	350	320	24	12	282	38	18	M 10 x 1.5	301	MS3156	9.050
HM3160	Tr 300 x 4	380	340	24	12	302	40	18	M 10 x 1.5	326	MS3160	11.800
HM3164	Tr 320 x 5	400	360	24	12	322.5	42	18	M 10 x 1.5	345	MS3164	13.100
HM3168	Tr 340 x 5	440	400	28	15	342.5	55	21	M 12 x 1.75	372	MS3168	23.100
HM3172	Tr 360 x 5	460	420	28	15	362.5	58	21	M 12 x 1.75	392	MS3172	25.100
HM3176	Tr 380 x 5	490	450	32	18	382.5	60	21	M 12 x 1.75	414	MS3176	30.900
HM3180	Tr 400 x 5	520	470	32	18	402.5	62	27	M 16 x 2	439	MS3180	36.900
HM3184	Tr 420 x 5	540	490	32	18	422.5	70	27	M 16 x 2	459	MS3184	43.500
HM3188	Tr 440 x 5	560	510	36	20	442.5	70	27	M 16 x 2	477	MS3188	45.300
HM3192	Tr 460 x 5	580	540	36	20	462.5	75	27	M 16 x 2	497	MS3192	50.400
HM3196	Tr 480 x 5	620	560	36	20	482.5	75	27	M 16 x 2	527	MS3196	62.200
HM31/500	Tr 500 x 5	630	580	40	23	502.5	80	27	M 16 x 2	539	MS31/500	63.300

(1) Tr means 30°; trapezoid thread and the digits are major diameter of thread and pitch.

LOCKNUTS-*continued*

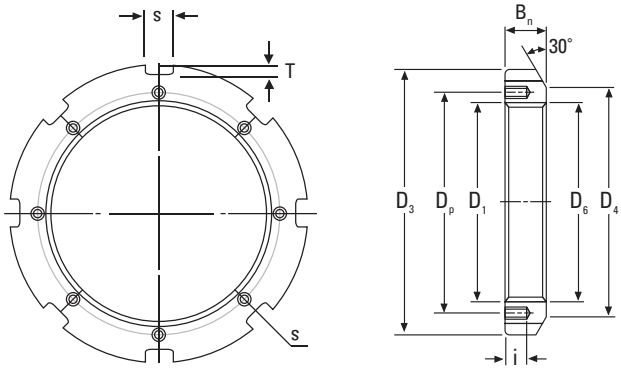

ANL

HM 30

Locknut No.	D_1 Thread (1)	D_3	D_4	S	T	D_6	B_n	i	Tapped Holes Threads	Dp	Suitable Lockplates No.	Weight
		mm	mm	mm	mm	mm	mm	mm		mm		kg
HM3044	Tr 220 x 4	260	242	20	9	222	30	12	M 6 x 1	229	MS3044	3.090
HM3048	Tr 240 x 4	290	270	20	10	242	34	15	M 8 x 1.25	253	MS3048	5.160
HM3052	Tr 260 x 4	310	290	20	10	262	34	15	M 8 x 1.25	273	MS3052	5.670
HM3056	Tr 280 x 4	330	310	24	10	282	38	15	M 8 x 1.25	293	MS3056	6.780
HM3060	Tr 300 x 4	360	336	24	12	302	42	15	M 8 x 1.25	316	MS3060	9.620
HM3064	Tr 320 x 5	380	356	24	12	322.5	42	15	M 8 x 1.25	335	MS3064	9.940
HM3068	Tr 340 x 5	400	376	24	12	342.5	45	15	M 8 x 1.25	355	MS3068	11.700
HM3072	Tr 360 x 5	420	394	28	13	362.5	45	15	M 8 x 1.25	374	MS3072	12.000
HM3076	Tr 380 x 5	450	422	28	14	382.5	48	18	M 10 x 1.5	398	MS3076	14.900
HM3080	Tr 400 x 5	470	442	28	14	402.5	52	18	M 10 x 1.5	418	MS3080	16.900
HM3084	Tr 420 x 5	490	462	32	14	422.5	52	18	M 10 x 1.5	438	MS3084	17.400
HM3088	Tr 440 x 5	520	490	32	15	442.5	60	21	M 12 x 1.75	462	MS3088	26.200
HM3092	Tr 460 x 5	540	510	32	15	462.5	60	21	M 12 x 1.75	482	MS3092	29.600
HM3096	Tr 480 x 5	560	530	36	15	482.5	60	21	M 12 x 1.75	502	MS3096	28.300
HM30/500	Tr 500 x 5	580	550	36	15	502.5	68	21	M 12 x 1.75	522	MS30/500	33.600

(1) Tr means 30°; trapezoid thread and the digits are major diameter of thread and pitch.

LOCKNUTS-*continued*

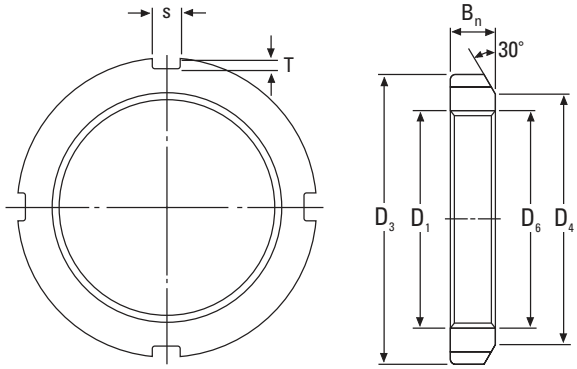

HN

HM

Locknut No.	D_1 Thread (1)	D_3	D_4	B_n	S	T	D_6	Weight
		mm	mm	mm	mm	mm	mm	kg
HM 42	Tr 210 x 4	270	238	30	20	10	212	4.750
HM 44	Tr 220 x 4	280	250	32	20	10	222	5.350
HM 46	Tr 230 x 4	290	260	34	20	10	232	5.800
HM 48	Tr 240 x 4	300	270	34	20	10	242	6.200
HM 50	Tr 250 x 4	320	290	36	20	10	252	7.000
HM 52	Tr 260 x 4	330	300	36	24	12	262	8.550
HM 54	Tr 270 x 4	340	310	38	24	12	272	9.200
HM 56	Tr 280 x 4	350	320	38	24	12	282	10.000
HM 58	Tr 290 x 4	370	330	40	24	12	292	11.800
HM 60	Tr 300 x 4	380	340	40	24	12	302	12.000
HM 62	Tr 310 x 5	390	350	42	24	12	312.5	13.400
HM 64	Tr 320 x 5	400	360	42	24	12	322.5	13.500
HM 66	Tr 330 x 5	420	380	52	28	15	332.5	20.400
HM 68	Tr 340 x 5	440	400	55	28	15	342.5	24.500
HM 70	Tr 350 x 5	450	410	55	28	15	352.5	25.200
HM 72	Tr 360 x 5	460	420	58	28	15	362.5	27.500
HM 74	Tr 370 x 5	470	430	58	28	15	372.5	28.200
HM 76	Tr 380 x 5	490	450	60	32	18	382.5	33.500
HM 80	Tr 400 x 5	520	470	62	32	18	402.5	40.000
HM 84	Tr 420 x 5	540	490	70	32	18	422.5	46.900
HM 88	Tr 440 x 5	560	510	70	36	20	442.5	48.500
HM 92	Tr 460 x 5	580	540	75	36	20	462.5	55.000
HM 96	Tr 480 x 5	620	560	75	36	20	482.5	67.000
HM 100	Tr 500 x 5	630	590	80	40	23	502.5	69.000
HM 102	Tr 510 x 6	650	590	80	40	23	513	75.000
HM 106	Tr 530 x 6	670	610	80	40	23	533	78.000
HM 110	Tr 550 x 6	700	640	80	40	23	553	92.500

(1) Tr means 30°; trapezoid thread and the digits are major diameter of thread and pitch.

LOCKNUTS-*continued*

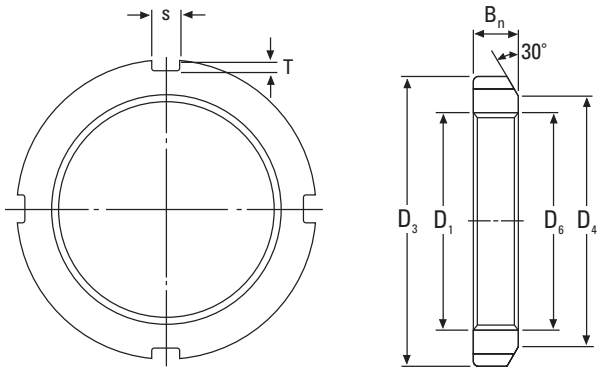

HNL

HML

Locknut No.	D_1 Thread (1)	D_3	D_4	B_n	S	T	D_6	Weight
		mm	mm	mm	mm	mm	mm	kg
HML 41	Tr 205 x 4	250	232	30	18	8	207	3.430
HML 43	Tr 215 x 4	260	242	30	20	9	217	3.720
HML 47	Tr 235 x 4	280	262	34	20	9	237	4.600
HML 52	Tr 260 x 4	310	290	34	20	10	262	5.800
HML 56	Tr 280 x 4	330	310	38	24	10	282	6.720
HML 60	Tr 300 x 4	360	336	42	24	12	302	9.600
HML 64	Tr 320 x 5	380	356	42	24	12	322.5	10.300
HML 69	Tr 345 x 5	410	384	45	28	13	347.5	11.500
HML 72	Tr 360 x 5	420	394	45	28	13	362.5	12.100
HML 73	Tr 365 x 5	430	404	48	28	13	367.5	14.200
HML 76	Tr 380 x 5	450	422	48	28	14	382.5	16.000
HML 77	Tr 385 x 5	450	422	48	28	14	387.5	15.000
HML 80	Tr 400 x 5	470	442	52	28	14	402.5	18.500
HML 82	Tr 410 x 5	480	452	52	32	14	412.5	19.000
HML 84	Tr 420 x 5	490	462	52	32	14	422.5	19.400
HML 86	Tr 430 x 5	500	472	52	32	14	432.5	19.800
HML 88	Tr 440 x 5	520	490	60	32	15	442.5	27.000
HML 90	Tr 450 x 5	520	490	60	32	15	452.5	23.800
HML 92	Tr 460 x 5	540	510	60	32	15	462.5	28.000
HML 94	Tr 470 x 5	540	510	60	32	15	472.5	25.000
HML 96	Tr 480 x 5	560	530	60	36	15	482.5	29.500
HML 98	Tr 490 x 5	580	550	60	36	15	492.5	34.000
HML 100	Tr 500 x 5	580	550	68	36	15	502.5	35.000
HML 104	Tr 520 x 6	600	570	68	36	15	523	37.000
HML 106	Tr 530 x 6	630	590	68	40	20	533	47.000
HML 108	Tr 540 x 6	630	590	68	40	20	543	43.500

(1) Tr means 30°; trapezoid thread and the digits are major diameter of thread and pitch.

LOCKWASHERS

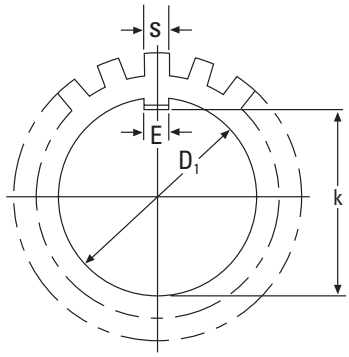

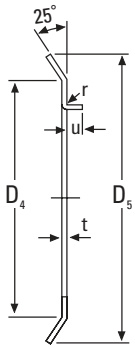

AW

MB

Lockwasher [1] No.	D_1	k	E	t	S	D_4	D_5	r	u	Number of Tangs	Weight per 100 pieces	Locknut No.
	mm	mm	mm	mm	mm	mm	mm	kg			kg	
MB 00	10	8.5	3	1	3	13	21	0.5	2	9	0.131	KM 00
MB 01	12	10.5	3	1	3	17	25	0.5	2	9	0.192	KM 01
MB 02	15	13.5	4	1	4	21	28	1	2.5	13	0.253	KM 02
MB 03	17	15.5	4	1	4	24	32	1	2.5	13	0.313	KM 03
MB 04	20	18.5	4	1	4	26	36	1	2.5	13	0.350	KM 04
MB 05	25	23	5	1.2	5	32	42	1	2.5	13	0.640	KM 05
MB 06	30	27.5	5	1.2	5	38	49	1	2.5	13	0.780	KM 06
MB 07	35	32.5	6	1.2	5	44	57	1	2.5	15	1.040	KM 07
MB 08	40	37.5	6	1.2	6	50	62	1	2.5	15	1.230	KM 08
MB 09	45	42.5	6	1.2	6	56	69	1	2.5	17	1.520	KM 09
MB 10	50	47.5	6	1.2	6	61	74	1	2.5	17	1.600	KM 10
MB 11	55	52.5	8	1.2	7	67	81	1	4	17	1.960	KM 11
MB 12	60	57.5	8	1.5	7	73	86	1.2	4	17	2.530	KM 12
MB 13	65	62.5	8	1.5	7	79	92	1.2	4	19	2.900	KM 13
MB 14	70	66.5	8	1.5	8	85	98	1.2	4	19	3.340	KM 14
MB 15	75	71.5	8	1.5	8	90	104	1.2	4	19	3.560	KM 15
MB 16	80	76.5	10	1.8	8	95	112	1.2	4	19	4.640	KM 16
MB 17	85	81.5	10	1.8	8	102	119	1.2	4	19	5.240	KM 17
MB 18	90	86.5	10	1.8	10	108	126	1.2	4	19	6.230	KM 18
MB 19	95	91.5	10	1.8	10	113	133	1.2	4	19	6.700	KM 19
MB 20	100	96.5	12	1.8	10	120	142	1.2	6	19	7.650	KM 20
MB 21	105	100.5	12	1.8	12	126	145	1.2	6	19	8.260	KM 21
MB 22	110	105.5	12	1.8	12	133	154	1.2	6	19	9.400	KM 22
MB 23	115	110.5	12	2	12	137	159	1.5	6	19	10.800	KM 23
MB 24	120	115	14	2	12	138	164	1.5	6	19	10.500	KM 24
MB 25	125	120	14	2	12	148	170	1.5	6	19	11.800	KM 25
MB 26	130	125	14	2	12	149	175	1.5	6	19	11.300	KM 26
MB 27	135	130	14	2	14	160	185	1.5	6	19	14.400	KM 27
MB 28	140	135	16	2	14	160	192	1.5	8	19	14.200	KM 28
MB 29	145	140	16	2	14	171	202	1.5	8	19	16.800	KM 29
MB 30	150	145	16	2	14	171	205	1.5	8	19	15.500	KM 30
MB 31	155	147.5	16	2.5	16	182	212	1.5	8	19	20.900	KM 31
MB 32	160	154	18	2.5	18	182	217	1.5	8	19	22.200	KM 32

LOCKWASHERS-*continued*

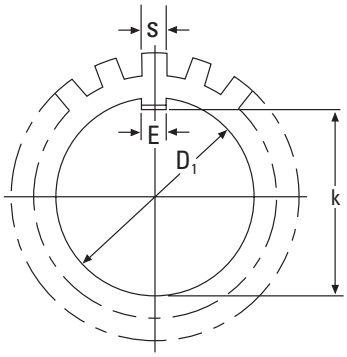

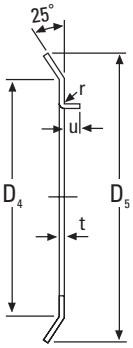

AW

MB

Lockwasher (1) No.	D1	k	E	t	S	D_4	D_5	r	u	Number of Tangs	Weight per 100 pieces	Locknut No.
	mm	mm	mm	mm	mm	mm	mm	mm	mm		kg	
MB 33	165	157.5	18	2.5	16	193	222	1.5	8	19	24.100	KM 33
MB 34	170	164	18	2.5	16	193	232	1.5	8	19	24.700	KM 34
MB 36	180	174	20	2.5	18	203	242	1.5	8	19	26.800	KM 36
MB 38	190	184	20	2.5	18	214	252	1.5	8	19	27.800	KM 38
MB 40	200	194	20	2.5	18	226	262	1.5	8	19	29.300	KM 40
MB 44	220	213	24	3.0	20	250	292	—	—	19	48.300	HM3144
MB 48	240	233	24	3.0	20	270	312	—	—	19	50.200	HM3148
MB 52	260	253	28	3.0	24	300	342	—	—	23	72.900	HM3152
MB 56	280	273	28	3.0	24	320	362	—	—	23	75.900	HM3156

(1) NO. AW00 - AW40 also available for 304 stainless steel.
Note: The specifications of AW can be applied for MB.

AWL

MBL

Lockwasher (1) No.	D1	k	E	t	S	D_4	D_5	r	u	Number of Tangs	Weight per 100 pieces	Locknut No.
	mm	mm	mm	mm	mm	mm	mm	mm	mm		kg	
MBL 24	120	115	14	2	12	133	155	1.5	6	19	7.700	KML24
MBL 26	130	125	14	2	12	143	165	1.5	6	19	8.700	KML26
MBL 28	140	135	16	2	14	151	175	1.5	8	19	10.900	KML28
MBL 30	150	145	16	2	14	164	190	1.5	8	19	11.300	KML30
MBL 32	160	154	18	2.5	16	174	200	1.5	8	19	16.200	KML32
MBL 34	170	164	18	2.5	16	184	210	1.5	8	19	19.000	KML34
MBL 36	180	174	20	2.5	18	192	220	1.5	8	19	18.000	KML36
MBL 38	190	184	20	2.5	18	202	230	1.5	8	19	20.500	KML38
MBL 40	200	194	20	2.5	18	218	240	1.5	8	19	21.400	KML40

(1) NO. AWL24 - AWL40 also available for 304 stainless steel.
Note: The specifications of AWL can be applied for MBL.

LOCKPLATES

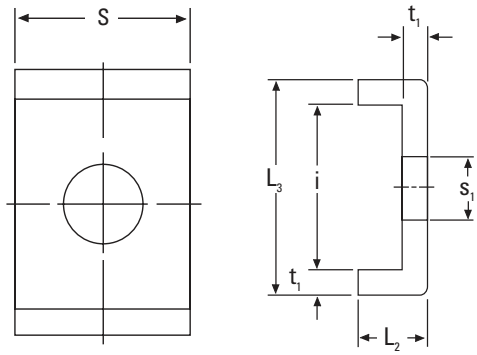

AL

MS 31

Lockplate No.	t_1	S	L_2	s_1	i	L_3	Suitable Locknuts No.	Weight per 100 pieces
	mm	mm	mm	mm	mm	mm		kg
MS3144	4	20	12	9	22.5	30.5	HM3144	2.600
MS3148	4	20	12	9	22.5	30.5	HM3148	2.600
MS3152	4	24	12	12	25.5	33.5	HM3152	3.390
MS3156	4	24	12	12	25.5	33.5	HM3156	3.390
MS3160	4	24	12	12	30.5	38.5	HM3160	3.790
MS3164	5	24	15	12	31	41	HM3164	5.350
MS3168	5	28	15	14	38	48	HM3168	6.650
MS3172	5	28	15	14	38	48	HM3172	6.650
MS3176	5	32	15	14	40	50	HM3176	7.960
MS3180	5	32	15	18	45	55	HM3180	8.200
MS3184	5	32	15	18	45	55	HM3184	8.200
MS3188	5	36	15	18	43	53	HM3188	9.000
MS3192	5	36	15	18	43	53	HM3192	9.000
MS3196	5	36	15	18	53	63	HM3196	10.400
MS31/500	5	40	15	18	45	55	HM31/500	10.500

LOCKPLATES-*continued*

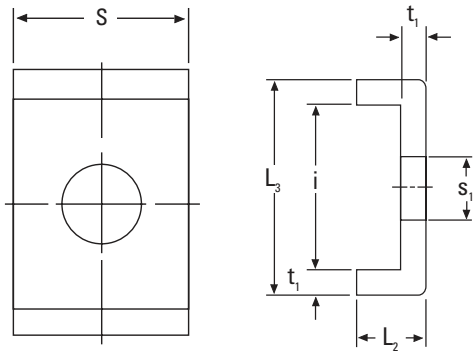

ALL

MS 30

Lockplate No.	t_1	S	L_2	s_1	i	L_3	Suitable Locknuts No.	Weight per 100 pieces
	mm	mm	mm	mm	mm	mm		kg
MS3044	4	20	12	7	13.5	21.5	HM3044	2.120
MS3048	4	20	12	9	17.5	25.5	HM3048	2.290
MS3052	4	20	12	9	17.5	25.5	HM3052	2.290
MS3056	4	24	12	9	17.5	25.5	HM3056	2.920
MS3060	4	24	12	9	20.5	28.5	HM3060	3.160
MS3064	5	24	15	9	21	31	HM3064	4.560
MS3068	5	24	15	9	21	31	HM3068	4.560
MS3072	5	28	15	9	20	30	HM3072	5.030
MS3076	5	28	15	12	24	34	HM3076	5.280
MS3080	5	28	15	12	24	34	HM3080	5.280
MS3084	5	32	15	12	24	34	HM3084	6.110
MS3088	5	32	15	14	28	38	HM3088	6.450
MS3092	5	32	15	14	28	38	HM3092	6.450
MS3096	5	36	15	14	28	38	HM3096	7.290
MS30/500	5	36	15	14	28	38	HM30/500	7.290

CONVERSION TABLES

mm = in. x 25.400		Inch-Millimeter Equivalents							mm = 0.039370 in.	
Inches		0″	1″	2″	3″	4″	5″	6″	7″	8″
Fractions	Decimals									
			25.400	50.800	76.200	101.600	127.000	152.400	177.800	203.200
1/64	.015625	0.397	25.797	51.197	76.597	101.997	127.397	152.797	178.197	203.597
1/32	.031250	0.794	26.194	51.594	76.994	102.394	127.794	153.194	178.594	203.994
3/64	.046875	1.191	26.591	51.991	77.391	102.791	128.191	153.591	178.991	204.391
1/16	.062500	1.588	26.988	52.388	77.788	103.188	128.588	153.988	179.388	204.788
5/64	.078125	1.984	27.384	52.784	78.184	103.584	128.984	154.384	179.784	205.184
3/32	.093750	2.381	27.781	53.181	78.581	103.981	129.381	154.781	180.181	205.581
7/64	.109375	2.778	28.178	53.578	78.978	104.378	129.778	155.178	180.578	205.978
1/8	.125000	3.175	28.575	53.975	79.375	104.775	130.175	155.575	180.975	206.375
9/64	.140625	3.572	28.972	54.372	79.772	105.172	130.572	155.972	181.372	206.772
5/32	.156250	3.969	29.369	54.769	80.169	105.569	130.969	156.369	181.769	207.169
11/64	.171875	4.366	29.766	55.166	80.566	105.966	131.366	156.766	182.166	207.566
3/16	.187500	4.763	30.163	55.563	80.963	106.363	131.763	157.163	182.563	207.963
13/64	.203125	5.159	30.559	55.959	81.359	106.759	132.159	157.559	182.959	208.359
7/32	.218750	5.556	30.956	56.356	81.756	107.156	132.556	157.956	183.356	208.756
15/64	.234375	5.953	31.353	56.753	82.153	107.553	132.953	158.353	183.753	209.153
1/4	.250000	6.350	31.750	57.150	82.550	107.950	133.350	158.750	184.150	209.550
17/64	.265625	6.747	32.147	57.547	82.947	108.347	133.747	159.147	184.547	209.947
9/32	.281250	7.144	32.544	57.944	83.344	108.744	134.144	159.544	184.944	210.344
19/64	.296875	7.541	32.941	58.341	83.741	109.141	134.541	159.941	185.341	210.741
5/16	.312500	7.938	33.338	58.738	84.138	109.538	134.938	160.338	185.738	211.138
21/64	.328125	8.334	33.734	59.134	84.534	109.934	135.334	160.734	186.134	211.534
11/32	.343750	8.731	34.131	59.531	84.931	110.331	135.731	161.131	186.531	211.931
23/64	.359375	9.128	34.528	59.928	85.328	110.728	136.128	161.528	186.928	212.328
3/8	.375000	9.525	34.925	60.325	85.725	111.125	136.525	161.925	187.325	212.725
25/64	.390625	9.922	35.322	60.722	86.122	111.522	136.922	162.322	187.722	213.122
13/32	.406250	10.319	35.719	61.119	86.519	111.919	137.319	162.719	188.119	213.519
27/64	.421875	10.716	36.116	61.516	86.916	112.316	137.716	163.116	188.516	213.916
7/16	.437500	11.113	36.513	61.913	87.313	112.713	138.113	163.513	188.913	214.313
29/64	.453125	11.509	36.909	62.309	87.709	113.109	138.509	163.909	189.309	214.709
15/32	.468750	11.906	37.306	62.706	88.106	113.506	138.906	164.306	189.706	215.106
31/64	.484375	12.303	37.703	63.103	88.503	113.903	139.303	164.703	190.103	215.503
1/2	.500000	12.700	38.100	63.500	88.900	114.300	139.700	165.100	190.500	215.900

CONVERSION TABLES-*continued*

mm = in. x 25.400		Inch-Millimeter Equivalents							mm = 0.039370 in.	
Inches		0″	1″	2″	3″	4″	5″	6″	7″	8″
Fractions	Decimals									
33/64	.515625	13.097	38.497	63.897	89.297	114.697	140.097	165.497	190.897	216.297
17/32	.531250	13.494	38.894	64.294	89.694	115.094	140.494	165.894	191.294	216.694
35/64	.546875	13.891	39.291	64.691	90.091	115.491	140.891	166.291	191.691	217.091
9/16	.562500	14.288	39.688	65.088	90.488	115.888	141.288	166.688	192.088	217.488
37/64	.578125	14.684	40.084	65.484	90.884	116.284	141.684	167.084	192.484	217.884
19/32	.593750	15.081	40.481	65.881	91.281	116.681	142.081	167.481	192.881	218.281
39/64	.609375	15.478	40.878	66.278	91.678	117.078	142.478	167.878	193.278	218.678
5/8	.625000	15.875	41.275	66.675	92.075	117.475	142.875	168.275	193.675	219.075
41/64	.640625	16.272	41.672	67.072	92.472	117.872	143.272	168.672	194.072	219.472
21/32	.656250	16.669	42.069	67.469	92.869	118.269	143.669	169.069	194.469	219.869
43/64	.671875	17.066	42.466	67.866	93.266	118.666	144.066	169.466	194.866	220.266
11/16	.687500	17.463	42.863	68.263	93.663	119.063	144.463	169.863	195.263	220.663
45/64	.703125	17.859	43.259	68.659	94.059	119.459	144.859	170.259	195.659	221.059
23/32	.718750	18.256	43.656	69.056	94.456	119.856	145.256	170.656	196.056	221.456
47/64	.734375	18.653	44.053	69.453	94.853	120.253	145.653	171.053	196.453	221.853
3/4	.750000	19.050	44.450	69.850	95.250	120.650	146.050	171.450	196.850	222.250
49/64	.765625	19.447	44.847	70.247	95.647	121.047	146.447	171.847	197.247	222.647
25/32	.781250	19.844	45.244	70.644	96.044	121.444	146.844	172.244	197.644	223.044
51/64	.796875	20.241	45.641	71.041	96.441	121.841	147.241	172.641	198.041	223.441
13/16	.812500	20.638	46.038	71.438	96.838	122.238	147.638	173.038	198.438	223.838
53/64	.828125	21.034	46.434	71.834	97.234	122.634	148.034	173.434	198.834	224.234
27/32	.843750	21.431	46.831	72.231	97.631	123.031	148.431	173.831	199.231	224.631
55/64	.859375	21.828	47.228	72.628	98.028	123.428	148.828	174.228	199.628	225.028
7/8	.875000	22.225	47.625	73.025	98.425	123.825	149.225	174.625	200.025	225.425
57/64	.890625	22.622	48.022	73.422	98.822	124.222	149.622	175.022	200.422	225.822
29/32	.906250	23.019	48.419	73.819	99.219	124.619	150.019	175.419	200.819	226.219
59/64	.921875	23.416	48.816	74.216	99.616	125.016	150.416	175.816	201.216	226.616
15/16	.937500	23.813	49.213	74.613	100.013	125.413	150.813	176.213	201.613	227.013
61/64	.953125	24.209	49.609	75.009	100.409	125.809	151.209	176.609	202.009	227.409
31/32	.968750	24.606	50.006	75.406	100.806	126.206	151.606	177.006	202.406	227.806
63/64	.984375	25.003	50.403	75.803	101.203	126.603	152.003	177.403	202.803	228.203

NOTES

The Product index below lists all the Timken bearings and accessories contained in this Catalog by item number, page, product description, and section. Asterisk (***) shown indicate that additional numbers / letters are necessary to complete the part numbers. Spherical roller bearings are shown by series designations not individual part numbers. (i.e. 22223BR would be found under 222** series).

NOTES

NOTES

TIMKEN
Where You Turn

Timken® Spherical Roller Bearing Catalog

TIMKEN
Where You Turn

Bearings • Steel •
Precision Components • Lubrication •
Seals • Remanufacture and Repair •
Industrial Services

www.timken.com

Printed in U.S.A.
15M 06-07-29 Order No. 10142