Catalogue 2305

Technical information

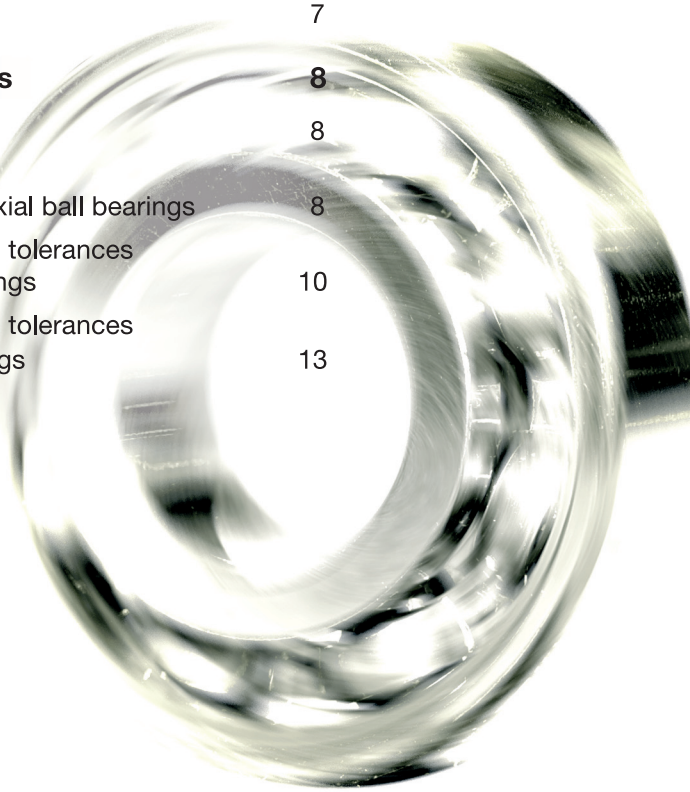

1. Material

The material used in the manufacture of ball bearings must be wear-resistant, impact-resistant and resistant to corrosion for various areas of application. Furthermore, it must possess high dimensional stability.

For standard bearings, we use the through-hardening chromium steel 100 CR 6 for rings and balls. In this case, after heat treatment the rings have a hardness of 60 to 64 HRC and the balls have a hardness of 62 to 65 HRC.

For corrosion-resistant bearings, the inner and outer rings are made from steel X 65 CR 13 or X 102 CR MO 17. The balls are also made from X 102 CR MO 17.

2. Internal clearance and operating clearance

Correct functioning of a ball bearing is dependent to a large extent on the correct operating clearance. The operating clearance is derived from the internal clearance of an unfitted bearing and any changes to this clearance as a result of interference fits and temperature influences in the fitted bearing.

2.1. Radial internal clearance

The radial internal clearance of a rolling bearing is the amount by which the inner ring can be moved radially in relation to the outer ring from one extreme position to the other in an unfitted bearing.

The radial internal clearance is subdivided into 5 groups (see Table 1: Radial internal clearance groups).

Ball bearings with a normal internal clearance CN have an operating clearance that is suitable for normal operating conditions if the recommended shaft and housing tolerances are observed.

An internal clearance C3, C4 or C5 is principally considered for larger bearings and those subjected to considerable loads, where the bearing rings are subjected to interference fits or where there is a considerable temperature difference between the inner and outer ring.

Bearings with an internal clearance C2 should only be used in exceptional cases, for example where they are subjected to severe alternating loads in conjunction with oscillating motion or low speeds. In such cases, careful monitoring of the bearing during operation is recommended since significant increases in temperature may occur.

The internal clearance is indicated by a suffix except for CN, or MC3 for miniature ball bearings.

Group	Definition
C2	Radial internal clearance smaller than CN
CN	Normal radial internal clearance
C3	Radial internal clearance larger than CN
C4	Radial internal clearance larger than C3
C5	Radial internal clearance larger than C4

Table 1: Radial internal clearance groups

Bore		Radial internal clearance											
d		MC1		MC2		MC3		MC4		MC5		MC6	
[mm]		[µm]		[µm]		[µm]		[µm]		[µm]		[µm]	
over	incl.	min.	max.	min.	max.	min.	max.	min.	max.	min.	max.	min.	max.
0,6	10	0	5	3	8	5	10	8	13	13	20	20	28

Table 2: Radial internal clearance for high precision miniature ball bearings

Bore		Radial internal clearance									
d		C2		CN		C3		C4		C5	
[mm]		[µm]		[µm]		[µm]		[µm]		[µm]	
over	incl.	min.	max.	min.	max.	min.	max.	min.	max.	min.	max.
10	18	0	9	3	18	11	25	18	33	25	45
18	24	0	10	5	20	13	28	20	36	28	48
24	30	1	11	5	20	13	28	23	41	30	53
30	40	1	11	6	20	15	33	28	46	40	64
40	50	1	11	6	23	18	36	30	51	45	73
50	65	1	15	8	28	23	43	38	61	55	90

Table 3: Radial internal clearance for single row deep groove ball bearings

Bore		Radial internal clearance
d [mm]		CN [µm]
over	incl.	min.	max.
6	10	6	17
10	14	6	19
14	18	8	21
18	24	10	23
24	30	11	24
30	40	13	29

Table 4: Radial internal clearance for double row self-aligning ball bearings with cylindrical bore

2.2. Operating clearance

The operating clearance is defined as the amount by which the shaft can be moved radially in relation to the outer ring of the bearing. The operating clearance is derived from the radial internal clearance and any changes to this clearance as a result of interference fits and temperature influences.

3. Mounting tolerances

A rolling bearing can only exhibit its full load carrying capacity if it is correctly located on the shaft and in the housing. The load and circumferential conditions in the particular application play an essential role here.
With circumferential loads and loose fits, the rings of rolling bearings will tend to creep. This leads to fretting corrosion, running noise and damage to the shaft or housing. Miniature ball bearings with very thin-walled rings can be easily subjected to preload if an excessively tight fit is selected. The preload (negative operating clearance) influences the expected life and the running smoothness of the bearing arrangement.

3.1. Shaft tolerances

The following tables contain general guidelines for the selection of suitable shaft and housing fits as a function of the load and circumferential conditions.
The tables are valid for solid steel shafts and housings made from steel or cast iron.

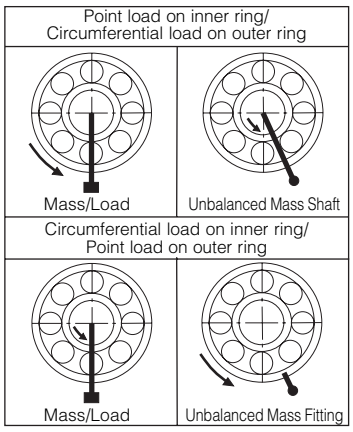

Conditions of rotation	Shaft diameter	Fitting of inner ring and load	ISO - tolerance zone
Point load on inner ring	All sizes	Inner ring can be easily displaced	g5, g6
		Inner ring cannot be easily displaced	h6, j6
Circumferential load on inner ring and indeterminate load direction	≦ 50	Normal load $P/C_r < 0,1$	j5, j6
	50 to 100	Low load $P/C_r < 0,08$	j6
		Normal and high load $P/C_r > 0,08$	k5, k6
	100 to 200	Low load $P/C_r < 0,1$	k6, m6
		Normal and high load $P/C_r > 0,1$	m6

Table 5: Guidelines for selection of shaft tolerances
Valid for solid steel shafts

3.2. Housing tolerances

If a different material is used for the adjacent construction, the following physical values must also be taken into consideration for the firm seating:

- modulus of elasticity
- coefficient of thermal expansion

This applies particularly in the case of:

- housings or shafts made from aluminium
- thin-walled housings
- hollow shafts

Conditions of rotation	Shaft diameter	Fitting of inner ring and load	ISO tolerance zone
Point load on outer ring	Outer ring can be easily displaced	Unsplit housing	H6, H7
		Split housing	H7, H8
		Heat dissipation via shaft	G7
	Outer ring cannot be easily displaced	Unsplit housing	J6
		Split housing	J7
Circumferential load on outer ring and indeterminate load direction	Outer ring cannot be easily displaced	Low and normal load	K7
		Normal load with shocks and high load	M7
		High load with shocks $P/C_r > 0,15$	N7

Table 6: Guidelines for selection of housing tolerances
Valid for housings made from steel or cast iron

4. Cages

The cage positions the balls at equidistant spacing about the pitch circle circumference. We can offer various cage designs.
A distinction is drawn between two groups of cages: metal cages and plastic cages.

Material	Type	Assembly condition
Steel	Two-piece	Tabbed or riveted
Steel	One-piece	Open
Brass	Two-piece	Tabbed or riveted
Brass	One-piece	Open
Polyamide	Injection moulded	Pressed in
Phenolic resin	Machined	Pressed in

Table 7: The most commonly used cages and their technical data

J or no code

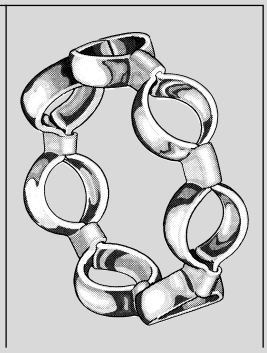

Sheet steel

T9H

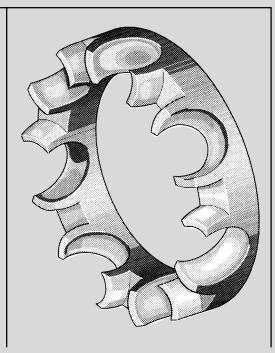

Polyamide PA 6.6 with 25% glass fibre reinforcement

TBH

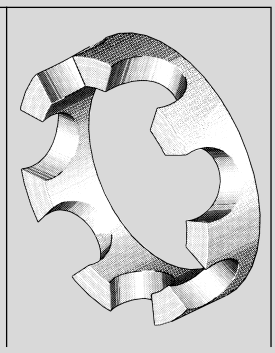

Laminated fabric (phenolic resin)

5. Sealing

Seals are used to protect the interior of the bearing from the ingress of dust, liquid or gaseous particles. Seals also prevent the escape of lubricant from the bearing.

5.1. Non-contact seals

In this design, a gap seal is formed between the ball bearing seal and the shoulder of the inner ring. The sealing shields are not in contact with the inner ring.

5.1.1. Metal sealing shields (2Z)

The sealing shields are made from pressed sheet steel and are either pressed in or secured using retaining rings. They give excellent protection against contamination by dust and solid particles.

5.1.2. Rubber seals (2RU)

These seals consist of Perbunan rubber with sheet steel reinforcement and are suitable for use at temperatures between –30°C and +120°C.

5.1.3. Teflon seals (TTS)

This seal design comprises a Teflon washer with glass fibre reinforcement that is designed for temperatures above 200°C.

5.2. Contact seals (2RS)

These ball bearing seals are in contact with the shoulder of the inner ring, which leads to an increase in the frictional torque. They are made from Perbunan rubber and are suitable for use at temperatures between –30°C and +120°C.

5.3. Other seal materials

For higher temperatures, increased sealing action or higher speeds, seals made from heat-resistant materials are used: acrylic rubber (ACM) or fluoro rubber (FPM)

6. Lubrication

The principal objective of bearing lubrication is to prevent direct contact between the rings, balls and cages. If the correct lubricant is used, this will significantly increase the operating life and the performance capability of the ball bearing.

The decision in favour of a particular lubricant should be taken on the basis of the general operating conditions and the frictional torque.

6.1. Oils

Oils are mainly used in those cases where frictional torques as low as possible are to be achieved. Where our ball bearings are of an open design or are fitted with a seal on one side, these are supplied coated with a preservative oil.

Manufacturer	Name	Designation	Base oil	Viscosity	Operating temperature
					[°C]
Shell	Aeroshell Fluid	AF 2	Diester	14	–50 ... +205
Andersen	Windsor Lube	WL 2	Diester	14	–55 ... +175
Klüber	Isoflex PDP 38	PDP 38	Ester	12	–65 ... +100

Table 8: Oils

6.2. Greases

Ball bearings with seals on both sides are supplied filled with grease. Grease lubrication gives protection against the ingress of moisture and foreign bodies.

The greases we use are listed in the table below.

Manu-facturer	Name	Desig-nation	Thickener	Base	Pour point	Consist-ency	Operating temperature
					[°C]		[°C]
Shell	Alvania No. 2	AV2	Lithium	Mineral	182	272	–25 ... +120
	ASG 16	AG6	Microgel	Polyester/mineral	260	280	–54 ... +204
	Cassida RLS	RL2	Aluminium	Synthetic	290	275	–25 ... +120 [1)]
Kyodo Yushi	Multemp SRL	SRL	Lithium	Ester	191	245	–40 ... +150
	Multemp PS No. 2	PS2	Lithium	Diester/mineral	190	275	–55 ... +130
Klüber	Staburags NBU 12	NB2	Barium	Mineral	220	270	–35 ... +150
	Staburags NBU 12 / 300 KP	NB3	Barium	Mineral	220	285	–20 ... +140
	Barrierta L 55/2	L55	Fluorotelomer	Fluorinate	–	280	–35 ... +260
	Isoflex Topas NB 52	B52	Barium	Hydrocarbon	240	280	–60 ... +160
	Isoflex LDS 18 Spezial A	L8A	Lithium	Diester	190	280	–60 ... +130
	Isoflex Super LDS 18	SL8	Lithium	Diester	190	280	–60 ... +130
Dow Corning	Molikote 33M	M3M	Lithium	Silicon	210	260	–70 ... +180
Caltex	Chevron SRI 2	SRI	Urea	Mineral	240	270	–30 ... +175
Dupont	Krytox 240 AC	K24	Fluorotelomer	Fluorinate	–	282	–35 ... +288

Table 9: Greases Other grease types are available for other specific operating conditions.

[1)] Foodstuff compatible (US DA-H1)

7. Dimensional and geometrical tolerances

The tolerances of our ball bearings conform to DIN 620-2 and DIN 620-3. The accuracy conforms to tolerance class PN.
Where higher bearing accuracy is required, the tolerances are restricted to tolerance classes P6, P5 and P4.

7.1. Main dimensions

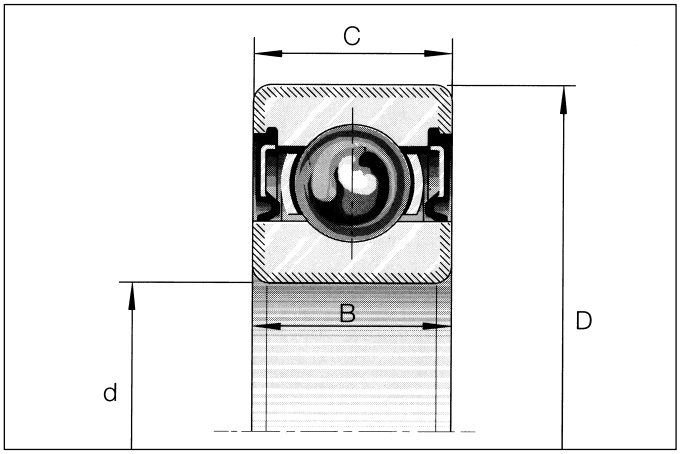

Figure 1: Main dimensions

7.2. Chamfer dimensions for radial ball bearings and axial ball bearings

The chamfer dimensions presented conform to the rules in DIN 620-6, ISO 582 (Figure 2: Chamfer dimensions, Table 10: Limit values for chamfer dimensions – tolerances in mm).

The minimum value of the chamfer dimension is given. For axial deep groove bearings, the tolerances for the chamfer dimensions in an axial direction are the same as those in a radial direction.

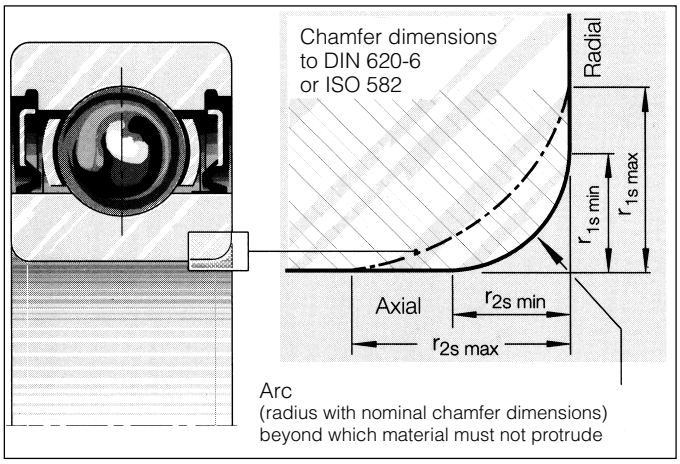

Figure 2: Chamfer dimensions

Nominal chamfer dimension	Bearing bore		Limit values for chamfer dimensions			
	d		Radial		Axial	
$r_{s\,min}$	over	incl.	$r_{1s\,min}$	$r_{1s\,max}$	$r_{2s\,min}$	$r_{2S\,max}$
0,05	–	–	0,05	0,10	0,05	0,2
0,08	–	–	0,08	0,16	0,08	0,3
0,10	–	–	0,10	0,20	0,10	0,4
0,15	–	–	0,15	0,30	0,15	0,6
0,20	–	–	0,20	0,50	0,20	0,8
0,30	–	40	0,30	0,60	0,30	1,0
	40	–	0,30	0,80	0,30	1,0

Nominal chamfer dimension	Bearing bore		Limit values for chamfer dimensions			
	d		Radial		Axial	
$r_{s\,min}$	over	incl.	$r_{1s\,min}$	$r_{1s\,max}$	$r_{2s\,min}$	$r_{2S\,max}$
0,60	–	40	0,60	1,00	0,60	2,0
	40	–	0,60	1,30	0,60	2,0
1,00	–	50	1,00	1,50	1,00	3,0
	50	–	1,00	1,90	1,00	3,0
1,10	–	120	1,10	2,00	1,10	3,5
	120	–	1,10	2,50	1,10	4,0

Table 10: Limit values for chamfer dimensions – tolerances in mm

Symbol	Definition to ISO 1132/DIN 620	Designation, symbol to ISO 1101
d	Nominal bore diameter	–
Δ_{dmp}	Deviation of mean bore diameter in a single plane	–
V_{dp}	Variation of single bore diameter in a single plane	Roundness O[1)]
V_{dmp}	Variation of mean bore diameter	Parallelism //
D	Nominal outside diameter	–
Δ_{Dmp}	Deviation of mean outside diameter in a single plane	–
V_{Dp}	Variation of single outside diameter in a single plane	Roundness O[2)]
V_{Dmp}	Variation of mean outside diameter	Parallelism //
B	Nominal inner ring width	–
Δ_{Bs}	Deviation of a single inner ring width	–
V_{Bs}	Variation of inner ring width	Parallelism //
C	Nominal outer ring width	–
Δ_{Cs}	Deviation of a single outer ring width	–
V_{Cs}	Variation of outer ring width	Parallelism //
K_{ia}	Radial runout of inner ring of assembled bearing	Runout ↑
K_{ea}	Radial runout of outer ring of assembled bearing	Runout ↑
S_d	Runout of inner ring face to the bore	Runout ↗
S_D	Runout of outer ring outside surface generatrix to the face	Runout ↗
S_e	Axial runout of outer ring of assembled bearing	–
S_{ea}	Axial runout of end face to outer ring raceway of assembled bearing	Runout ↗
S_i	Axial runout of inner ring of assembled bearing	–
S_{ia}	Axial runout of end face to inner ring raceway of assembled bearing	Runout↗

Table 11: Tolerance symbols and definitions

[1)] The roundness to ISO 1101 corresponds to half the tolerance value for the diameter variation in a single radial plane V_{dp} or V_{Dp} in accordance with DIN 620.

[2)] See [1)]

7.3. Dimensional and geometrical tolerances to DIN 620 – radial ball bearings

Tolerance class PN – Normal tolerance

d		Δ_{dmp}		V_{dp}			V_{dmp}	K_{ia}	Δ_{Bs}		V_{Bs}
				for diameter series to DIN 616							
[mm]		Deviation		7, 8, 9	0, 1	2, 3, 4			Deviation		
over	incl.	upper	lower	max.			max.	max.	upper	lower	max.
0,6[1]	2,5	0	-8	10	8	6	6	10	0	-40	12
2,5	10	0	-8	10	8	6	6	10	0	-120	15
10	18	0	-8	10	8	6	6	10	0	-120	20
18	30	0	-10	13	10	8	8	13	0	-120	20
30	50	0	-12	15	12	9	9	15	0	-120	20
50	80	0	-15	19	19	11	11	20	0	-150	25
80	120	0	-20	25	25	15	15	25	0	-200	25
120	180	0	-25	31	31	19	19	30	0	-250	30

Table 12: Inner ring – tolerances in µm

D		Δ_{Dmp}		V_{Dp} [2]				V_{Dmp} [3]	K_{ea}	Δ_{Cs}	V_{Cs}
				Unsealed bearings for diameter series to DIN 616			Bearings with shields or seals				
[mm]		Deviation		7, 8, 9	0, 1	2, 3, 4	0, 1, 2, 3, 4				
over	incl.	upper	lower	max.			max.	max.	max.		
2,5[4]	6	0	- 8	10	8	6	10	6	15	Identical to Δ_{Bs} and V_{Bs} of the inner ring of the relevant bearing (see Table 12: Inner ring – tolerances in µm)	
6	18	0	- 8	10	8	6	10	6	15		
18	30	0	- 9	12	9	7	12	7	15		
30	50	0	-11	14	11	8	16	8	20		
50	80	0	-13	16	13	10	20	10	25		
80	120	0	-15	19	19	11	26	11	35		
120	150	0	-18	23	23	14	30	14	40		
150	180	0	-25	31	31	19	38	19	45		
180	250	0	-30	38	38	23	–	23	50		
250	315	0	-35	44	44	26	–	26	60		

Table 13: Outer ring – tolerances in µm

[1] This diameter is included in the group
[2] Applies before assembly of the bearing and after removal of internal and/or external snap rings
[3] See [2]
[4] This diameter is included in the group

Tolerance class P6 – Restricted tolerance

d		Δ_{dmp}		V_{dp}			V_{dmp}	K_{ia}	Δ_{Bs}		V_{Bs}
				for diameter series to DIN 616							
[mm]		Deviation		7, 8, 9	0, 1	2, 3, 4			Deviation		
over	incl.	upper	lower	max.			max.	max.	upper	lower	max.
0,6[1]	2,5	0	-7	9	7	5	5	5	0	-40	12
2,5	10	0	-7	9	7	5	5	6	0	-120	15
10	18	0	-7	9	7	5	5	7	0	-120	20
18	30	0	-8	10	8	6	6	8	0	-120	20
30	50	0	-10	13	10	8	8	10	0	-120	20
50	80	0	-12	15	15	9	9	10	0	-150	25
80	120	0	-15	19	19	11	11	13	0	-200	25
120	180	0	-18	23	23	14	14	18	0	-250	30

Table 14: Inner ring – tolerances in µm

D		Δ_{Dmp}		V_{Dp} [2]			V_{Dp} [2]	V_{Dmp} [2]	K_{ea}	Δ_{Cs}	V_{Cs}
				Unsealed bearings for diameter to series DIN 616			Bearings with shields or seals				
[mm]		Deviation		7, 8, 9	0, 1	2, 3, 4	0, 1, 2, 3, 4				
over	incl.	upper	lower	max.			max.	max.	max.		
2,5[1]	6	0	- 7	9	7	5	9	5	8	Identical to Δ_{Bs} and V_{Bs} of the inner ring of the relevant bearing (see Table 14)	
6	18	0	- 7	9	7	5	9	5	8		
18	30	0	- 8	10	8	6	10	6	9		
30	50	0	-9	11	9	7	13	7	10		
50	80	0	-11	14	11	8	16	8	13		
80	120	0	-13	16	16	10	20	10	18		
120	150	0	-15	19	19	11	25	11	20		
150	180	0	-18	23	23	14	30	14	23		
180	250	0	-20	25	25	15	–	15	25		
250	315	0	-25	31	31	19	–	19	30		

Table 15: Outer ring – tolerances in µm

[1] This diameter is included in the group
[2] Applies before assembly of the bearing and after removal of internal and/or external snap rings

7.3. Dimensional and geometrical tolerances to DIN 620 – radial ball bearings

Tolerance class P5 – Restricted tolerance

d		Δ_{dmp}		V_{dp}		V_{dmp}	K_{ia}	S_d	S_{ia} [2]	Δ_{Bs}		V_{Bs}
				for diameter series to DIN 616								
[mm]		Deviation		7, 8, 9	0, 1, 2, 3, 4					Deviation		
over	incl.	upper	lower	max.		max.	max.	max.	max.	upper	lower	max.
0,6[1]	2,5	0	-5	5	4	3	4	7	7	0	-40	5
2,5	10	0	-5	5	4	3	4	7	7	0	-40	5
10	18	0	-5	5	4	3	4	7	7	0	-80	5
18	30	0	-6	6	5	3	4	8	8	0	-120	5
30	50	0	-8	8	6	4	5	8	8	0	-120	5
50	80	0	-9	9	7	5	5	8	8	0	-150	6
80	120	0	-10	10	8	5	6	9	9	0	-200	7
120	180	0	-13	13	10	7	8	10	10	0	-250	8

Table 16: Inner ring – tolerances in µm

D		Δ_{Dmp}		V_{Dp} [3]		V_{Dmp}	K_{ea}	S_D	S_{ea} [3]	Δ_{Cs}	V_{Cs}
				for diameter series to DIN 616							
[mm]		Deviation		7, 8, 9	0, 1, 2, 3, 4					Deviation	
over	incl.	upper	lower	max.		max.	max.	max.	max.		max.
2,5[1]	6	0	- 5	5	4	3	5	8	8	Identical to Δ_{Bs} of the inner ring of the relevant bearing (see Table 16)	5
6	18	0	- 5	5	4	3	5	8	8		5
18	30	0	- 6	6	5	3	6	8	8		5
30	50	0	-7	7	5	4	7	8	8		5
50	80	0	-9	9	7	5	8	8	10		6
80	120	0	-10	10	8	5	10	9	11		8
120	150	0	-11	11	8	6	11	10	13		8
150	180	0	-13	13	10	7	13	10	14		8
180	250	0	-15	15	11	8	15	11	15		10
250	315	0	-18	18	14	9	18	13	18		11

Table 17: Outer ring – tolerances in µm

[1] This diameter is included in the group
[2] For deep groove ball bearings only
[3] No values are defined for bearings with sealing shields or lip seals

7.4. Dimensional and geometrical tolerances to DIN 620 – axial ball bearings

Tolerance class PN – Normal tolerance

d and d_2		Δ_{dmp}		V_{dp}
[mm]		Deviation		
over	incl.	upper	lower	max.
–	18	0	-8	6
18	30	0	-10	8
30	50	0	-12	9
50	80	0	-15	11
80	120	0	-20	15
120	180	0	-25	19

Table 18: Bore diameter tolerance for shaft locating washers – tolerances in µm

Tolerance class PN – Normal tolerance

D		S_i	S_e
[mm]			
over	incl.	max.	max.
–	18	10	Identical to S_i for shaft locating washer of the relevant bearing
18	30	10	
30	50	10	
50	80	10	
80	120	15	
120	180	15	

Table 19: Washer thickness variation in shaft and housing locating washers – tolerances in µm

Tolerance class PN – Normal tolerance

D		Δ_{Dmp}		V_{Dp}
[mm]		Deviation		
over	incl.	upper	lower	max.
10	18	0	-11	8
18	30	0	-13	10
30	50	0	-16	12
50	80	0	-19	14
80	120	0	-22	17
120	180	0	-25	19
180	250	0	-30	23

Table 20: Outside diameter tolerances for housing locating washers – tolerances in µm

Bearing height tolerances

D		T	
[mm]		Deviation	
over	incl.	upper	lower
–	30	+20	-250
30	50	+20	-250
50	80	+20	-300
80	120	+20	-300
120	180	+20	-400

Table 21: Nominal height tolerances for single direction bearing – tolerances in µm

High precision miniature ball bearings

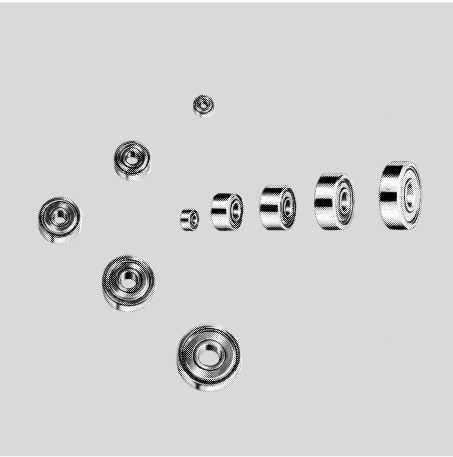

High precision miniature ball bearings are particularly suitable for use in small electric motors, office machinery, mechatronics, medical equipment, household appliances, etc.

They are available in open design, with non-contact shields/seals (suffix 2Z/2RU/TTS) and with contact seals (suffix 2RS).

Tolerances to DIN 620, tolerance class PN.

Accuracy class P6/P5/P4 available by agreement.

All miniature ball bearings are also available in stainless-steel versions (suffix VA) and by agreement with plastic cages.

Diameter [mm]	Designations					Dimensions [mm]				
		Seal design								
	open	2Z	2RS	2RU	TTS			open	2Z/2RS/2RU	
d						d	D	B	B_1	r_s(min)
0,6	**68/0,6**					0,6	2,5	1,0	–	0,05
1,0	**681**					1,0	3,0	1,0	–	0,05
	MR 31					1,0	3,0	1,5	–	0,05
	691					1,0	4,0	1,6	–	0,10
1,2	**MR 41 X**	**MR 41 X 2Z**				1,2	4,0	1,8	2,5	0,10
1,5	**681 X**	**681 X 2Z**				1,5	4,0	1,2	2,0	0,05
	691 X	**691 X 2Z**				1,5	5,0	2,0	2,6	0,15
	601 X	**601 X 2Z**				1,5	6,0	2,5	3,0	0,15
2,0	**672**	**672 2Z**				2,0	4,0	1,2	2,0	0,05
	682	**682 2Z**				2,0	5,0	1,5	2,3	0,08
	MR 52	**MR 52 2Z**				2,0	5,0	2,0	2,5	0,10
	692	**692 2Z**			**692 TTS**	2,0	6,0	2,3	3,0	0,15
		692 2Z W2,3				2,0	6,0	–	2,3	0,15
	MR 62	**MR 62 2Z**				2,0	6,0	2,5	2,5	0,15
	MR 72	**MR 72 2Z**			**MR 72 TTS**	2,0	7,0	2,5	3,0	0,15
	602	**602 2Z**				2,0	7,0	2,8	3,5	0,15
2,5	**682 X**	**682 X 2Z**				2,5	6,0	1,8	2,6	0,08
	692 X	**692 X 2Z**			**692 X TTS**	2,5	7,0	2,5	3,5	0,15
		692 X 2Z W2,5				2,5	7,0	–	2,5	0,15
	MR 82 X					2,5	8,0	2,5	–	0,20
	602 X	**602 X 2Z**				2,5	8,0	2,8	4,0	0,15
3,0	**MR 63**	**MR 63 2Z**				3,0	6,0	2,0	2,5	0,10
		MR 63 2Z W3				3,0	6,0	2,0	3,0	0,10
	683	**683 2Z**			**683 TTS**	3,0	7,0	2,0	3,0	0,10
	MR 83	**MR 83 2Z**				3,0	8,0	2,5	3,0	0,15
	693	**693 2Z**	**693 2RS**			3,0	8,0	3,0	4,0	0,15
	MR 93	**MR 93 2Z**				3,0	9,0	2,5	4,0	0,20
	603	**603 2Z**				3,0	9,0	3,0	5,0	0,15
	623	**623 2Z**	**623 2RS**			3,0	10,0	4,0	4,0	0,15
	633	**633 2Z**				3,0	13,0	5,0	5,0	0,20

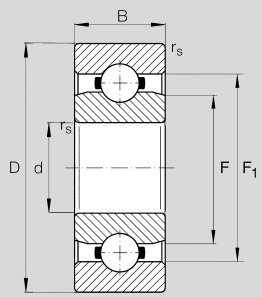

6.. (X)(VA)
MR.. (VA)

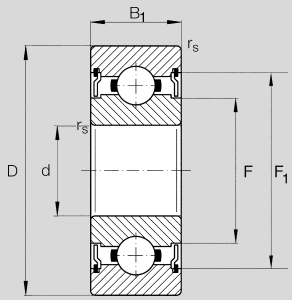

6.. (X)2Z(VA)
MR.. 2Z (VA)

Basic load ratings [N]		Limiting speed [1/min]			Shoulder dimensions [mm]				Mass [g]		Diameter [mm]
		2RS	open/2Z/2RU/TTS	open/2Z/2RU	open		2Z/2RS/2RU/TTS		open	2Z	
dyn. C_r	stat. C_{0r}	Grease	Grease	Oil	F	F_1	F	F_1			d
68	16		142000	160000	1,15	1,95	–	–	0,02	–	**0,6**
96	26		130000	150000	1,60	2,40	–	–	0,03	–	**1,0**
96	26		130000	150000	1,60	2,40	–	–	0,05	–	
141	37		100000	120000	2,02	3,80	–	–	0,11	–	
112	33		110000	130000	2,15	3,05	2,15	3,50	0,10	0,14	**1,2**
112	33		100000	120000	2,15	3,05	2,15	3,50	0,10	0,14	**1,5**
169	50		85000	100000	2,70	3,90	2,70	4,40	0,20	0,25	
330	99		75000	90000	3,00	4,80	3,00	5,40	0,31	0,40	
124	40		91000	104000	2,55	3,45	2,55	3,65	0,05	0,08	**2,0**
169	50		85000	100000	2,70	3,90	2,70	4,40	0,15	0,20	
169	50		85000	100000	2,70	3,90	2,70	4,40	0,14	0,20	
330	99		75000	90000	3,00	4,80	3,00	5,40	0,28	0,35	
330	99		75000	90000	3,00	4,80	3,00	5,40	–	0,32	
330	99		75000	90000	3,00	4,80	3,00	5,40	0,28	0,33	
386	129		63000	75000	3,85	5,65	3,15	6,20	0,43	0,53	
386	129		60000	71000	3,85	5,65	3,15	6,20	0,50	0,60	
209	74		71000	80000	3,70	4,90	3,70	5,40	0,20	0,35	**2,5**
386	129		63000	75000	3,85	5,65	3,85	6,20	0,40	0,55	
386	129		63000	75000	3,85	5,65	3,85	6,20	0,40	0,55	
558	180		60000	67000	4,35	6,65	–	–	0,52	–	
552	177		60000	71000	4,10	6,44	4,10	7,04	0,61	0,85	
209	74		71000	80000	3,70	4,90	3,70	5,40	0,20	0,28	**3,0**
209	74		71000	80000	3,70	4,90	3,70	5,40	0,20	0,28	
311	112		63000	75000	4,28	5,75	3,85	6,35	0,32	0,45	
395	141		60000	67000	5,00	6,80	5,00	7,40	0,51	0,67	
558	180	38000	60000	67000	4,35	6,65	4,35	7,25	0,60	0,80	
571	189		56000	67000	4,86	7,20	4,35	7,90	0,75	1,15	
571	189		56000	67000	4,86	7,20	4,35	7,90	0,84	1,43	
631	219	36000	50000	60000	4,80	7,08	4,35	7,98	1,45	1,65	
1301	488		40000	48000	6,95	10,45	6,00	11,30	3,27	3,43	

High precision miniature ball bearings

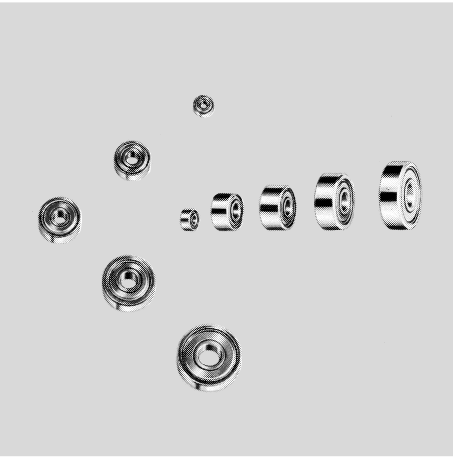

High precision miniature ball bearings are particularly suitable for use in small electric motors, office machinery, mechatronics, medical equipment, household appliances, etc.

They are available in open design, with non-contact shields/seals (suffix 2Z/2RU/TTS) and with contact seals (suffix 2RS).

Tolerances to DIN 620, tolerance class PN.
Accuracy class P6/P5/P4 available by agreement.

All miniature ball bearings are also available in stainless-steel versions (suffix VA) and by agreement with plastic cages.

Diameter [mm]	Designations					Dimensions [mm]				
		Seal design								
	open	2Z	2RS	2RU	TTS			open	2Z/2RS/2RU	
d						d	D	B	B_1	r_s(min)
4,0	**MR 74**					4,0	7,0	2,0	–	0,10
		MR 74 2Z				4,0	7,0	–	2,5	0,10
	MR 84	**MR 84 2Z**				4,0	8,0	2,0	3,0	0,15
	684	**684 2Z**	**684 2RS**		**684 TTS**	4,0	9,0	2,5	4,0	0,10
		684 2Z W3,5				4,0	9,0	–	3,5	0,10
	MR 104	**MR 104 2Z**	**MR 104 2RS**			4,0	10,0	3,0	4,0	0,20
	694	**694 2Z**	**694 2RS**			4,0	11,0	4,0	4,0	0,15
	604	**604 2Z**				4,0	12,0	4,0	4,0	0,20
	624	**624 2Z**	**624 2RS**	**624 2RU**		4,0	13,0	5,0	5,0	0,20
	634	**634 2Z**	**634 2RS**		**634 TTS**	4,0	16,0	5,0	5,0	0,30
5,0	**MR 85**					5,0	8,0	2,0	–	0,10
		MR 85 2Z			**MR 85 TTS**	5,0	8,0	–	2,5	0,10
		MR 85 2Z W3				5,0	8,0	–	3,0	0,10
	MR 95	**MR 95 2Z**			**MR 95 TTS**	5,0	9,0	2,5	3,0	0,15
	MR 105	**MR 105 2Z**	**MR 105 2RS**			5,0	10,0	3,0	4,0	0,15
	MR 115	**MR 115 2Z**	**MR 115 2RS**			5,0	11,0	–	4,0	0,15
	685	**685 2Z**	**685 2RS**			5,0	11,0	3,0	5,0	0,15
	695	**695 2Z**	**695 2RS**		**695 TTS**	5,0	13,0	4,0	4,0	0,20
		695 2Z W5	**695 2RS W5**			5,0	13,0	–	5,0	0,30
	605	**605 2Z**	**605 2RS**			5,0	14,0	5,0	5,0	0,20
	625	**625 2Z**	**625 2RS**	**625 2RU**	**625 TTS**	5,0	16,0	5,0	5,0	0,30
	635	**635 2Z**	**635 2RS**			5,0	19,0	6,0	6,0	0,30
6,0	**MR 106**	**MR 106 2Z**			**MR 106 TTS**	6,0	10,0	2,5	3,0	0,15
	MR 126	**MR 126 2Z**	**MR 126 2RS**			6,0	12,0	3,0	4,0	0,20
	686	**686 2Z**	**686 2RS**	**686 2RU**	**686 TTS**	6,0	13,0	3,5	5,0	0,15
		686 2Z W4,5	**686 2RS W4,5**			6,0	13,0	–	4,5	0,15
	696	**696 2Z**	**696 2RS**		**696 TTS**	6,0	15,0	5,0	5,0	0,20
	696 A	**696 A 2Z**				6,0	16,0	5,0	5,0	0,20
	606	**606 2Z**	**606 2RS**			6,0	17,0	6,0	6,0	0,30
	626	**626 2Z**	**626 2RS**	**626 2RU**	**626 TTS**	6,0	19,0	6,0	6,0	0,30
	636	**636 2Z**				6,0	22,0	7,0	7,0	0,30

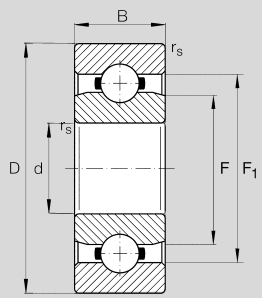

6.. (X)(VA)
MR.. (VA)

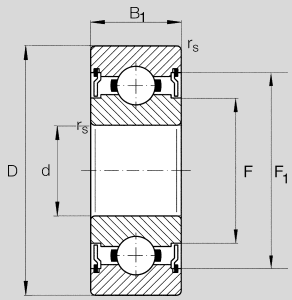

6.. (X)2Z(VA)
MR.. 2Z (VA)

Basic load ratings [N]		Limiting speed [1/min]			Shoulder dimensions [mm]				Mass [g]		Diameter [mm]
		2RS	open/2Z/2RU/TTS	open/2Z/2RU	open		2Z/2RS/2RU/TTS		open	2Z	
dyn. C_r	stat. C_{0r}	Grease	Grease	Oil	F	F_1	F	F_1			d
311	115		60000	67000	4,75	6,25	–	–	0,23	–	**4,0**
255	108		60000	67000	4,80	6,00	4,80	6,30	–	0,33	
395	141		56000	67000	5,00	6,80	5,00	7,40	0,39	0,56	
641	227	37800	53000	63000	5,20	7,50	5,20	8,10	0,65	1,00	
641	227		53000	63000	5,20	7,50	5,20	8,10	0,65	1,00	
711	272	33600	48000	56000	6,15	8,35	5,60	8,95	0,95	1,33	
967	350	33600	48000	56000	6,15	8,95	5,60	9,85	1,69	1,75	
957	350		48000	56000	6,15	8,95	5,60	9,85	2,19	2,34	
1301	488	28000	40000	48000	6,95	10,45	6,00	11,35	3,10	3,20	
1340	523	25500	36000	43000	8,20	11,70	6,70	13,00	5,24	5,44	
308	120		53000	63000	5,75	7,25	–	–	0,25	–	**5,0**
218	90		53000	63000	5,80	7,00	5,80	7,40	–	0,34	
218	90		53000	63000	–	–	5,80	7,40	–	0,35	
431	169		50000	60000	6,00	7,80	6,00	8,20	0,54	0,58	
431	169	40000	50000	60000	6,00	7,80	6,00	8,40	0,91	1,26	
716	282	37000	45000	53000	6,81	9,19	6,81	9,90	–	0,62	
716	282		45000	53000	6,81	9,19	6,20	9,90	1,16	1,93	
1077	432	38000	43000	50000	7,50	10,50	6,60	11,20	2,31	2,39	
1077	432	38000	43000	50000			6,60	11,20		2,39	
1329	507	34000	40000	50000	7,79	11,28	6,90	12,20	3,46	3,75	
1729	675	33000	36000	43000	8,55	12,50	7,50	13,80	4,95	5,10	
2336	896	28000	32000	40000	10,12	15,02	8,50	16,50	8,50	8,89	
496	218		45000	53000	7,04	8,90	7,04	9,30	0,55	0,70	**6,0**
716	295	35000	43000	50000	7,73	10,19	7,20	10,90	1,25	1,66	
1082	442	35000	40000	50000	8,00	11,00	7,40	11,70	1,87	2,68	
1082	442	35000	40000	50000	–	–	7,40	11,70	–	2,68	
1340	523	35000	40000	45000	8,20	11,70	7,50	13,00	3,65	3,85	
1480	618		38000	32000	7,90	14,40	7,90	14,40	4,40	4,60	
2263	846	31000	38000	45000	8,92	13,75	8,20	14,80	5,94	6,89	
2336	896	28000	32000	40000	10,12	15,02	8,50	16,50	8,12	8,65	
3333	1423		30000	36000	12,14	18,00	10,50	19,03	13,90	14,50	

High precision miniature ball bearings

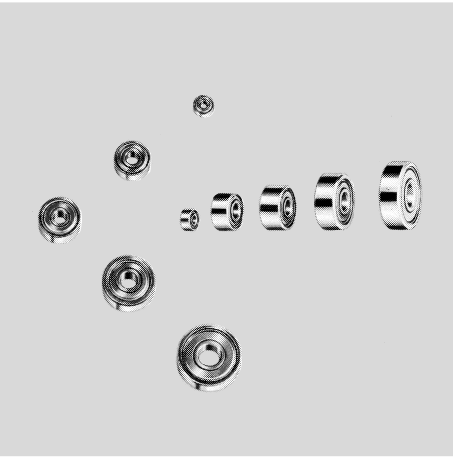

High precision miniature ball bearings are particularly suitable for use in small electric motors, office machinery, mechatronics, medical equipment, household appliances, etc.

They are available in open design, with non-contact shields/seals (suffix 2Z/2RU/TTS) and with contact seals (suffix 2RS).

Tolerances to DIN 620, tolerance class PN.
Accuracy class P6/P5/P4 available by agreement.

All miniature ball bearings are also available in stainless-steel versions (suffix VA) and by agreement with plastic cages.

Diameter [mm]	Designations					Dimensions [mm]				
		Seal design								
	open	2Z	2RS	2RU	TTS			open	2Z/2RS/2RU	
d						d	D	B	B_1	r_s(min)
7,0	**MR 117**	**MR 117 2Z**			**MR 117 TTS**	7,0	11,0	2,5	3,0	0,15
	MR 137	**MR 137 2Z**				7,0	13,0	3,0	4,0	0,20
	687	**687 2Z**	**687 2RS**		**687 TTS**	7,0	14,0	3,5	5,0	0,15
		687 2Z W4				7,0	14,0	–	4,0	0,15
	697	**697 2Z**	**697 2RS**			7,0	17,0	5,0	5,0	0,30
	607	**607 2Z**	**607 2RS**	**607 2RU**	**607 TTS**	7,0	19,0	6,0	6,0	0,30
	627	**627 2Z**	**627 2RS**		**627 TTS**	7,0	22,0	7,0	7,0	0,30
	637	**637 2Z**				7,0	26,0	9,0	9,0	0,30
8,0	**MR 128**	**MR 128 2Z**			**MR 128 TTS**	8,0	12,0	2,5	3,5	0,15
	MR 148	**MR 148 2Z**	**MR 148 2RS**			8,0	14,0	3,5	4,0	0,20
	688	**688 2Z**	**688 2RS**	**688 2RU**	**688 TTS**	8,0	16,0	4,0	5,0	0,20
		688 2Z W4				8,0	16,0	–	4,0	0,20
		688 2Z W6	**688 2RS W6**	**688 2RU W6**		8,0	16,0	–	6,0	0,20
	698	**698 2Z**	**698 2RS**	**698 2RU**		8,0	19,0	6,0	6,0	0,30
	608	**608 2Z**	**608 2RS**	**608 2RU**	**608 TTS**	8,0	22,0	7,0	7,0	0,30
		608 KDDB				8,0	22,0	–	7,0	0,30
	628	**628 2Z**	**628 2RS**	**628 2RU**		8,0	24,0	8,0	8,0	0,30
	638	**638 2Z**				8,0	28,0	9,0	9,0	0,30
			630/8 2RS			8,0	22,0	–	11,0	0,30
9,0	**679**	**679 2Z**				9,0	14,0	3,0	4,5	0,10
	689	**689 2Z**	**689 2RS**			9,0	17,0	4,0	5,0	0,20
		689 2Z W6	**689 2RS W6**			9,0	17,0	–	6,0	0,20
	699	**699 2Z**	**699 2RS**			9,0	20,0	6,0	6,0	0,30
	609	**609 2Z**	**609 2RS**			9,0	24,0	7,0	7,0	0,30
	629	**629 2Z**	**629 2RS**			9,0	26,0	8,0	8,0	0,30
	639	**639 2Z**				9,0	30,0	10,0	10,0	0,60

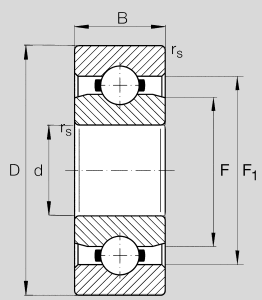

6.. (X)(VA)
MR.. (VA)

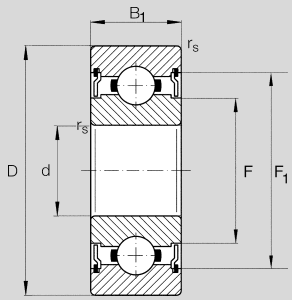

6.. (X)2Z(VA)
MR.. 2Z (VA)

Basic load ratings [N]		Limiting speed [1/min]			Shoulder dimensions [mm]				Mass [g]		Diameter [mm]
		2RS	open/2Z/2RU/TTS	open/2Z/2RU	open		2Z/2RS/2RU/TTS		open	2Z	
dyn. C_r	stat. C_{0r}	Grease	Grease	Oil	F	F_1	F	F_1			d
455	202		43000	50000	8,04	9,96	8,04	10,26	0,59	0,71	**7,0**
541	276		40000	48000	9,35	11,15	9,00	11,75	1,52	2,01	
1173	513	31000	40000	50000	9,00	12,00	8,50	12,70	2,03	2,95	
1173	513	31000	40000	50000	9,00	12,00	8,50	12,70	2,03	2,95	
1605	719	28000	36000	43000	10,40	13,60	9,30	14,30	5,26	5,01	
2336	896	28000	36000	43000	10,12	15,02	9,00	16,50	7,80	8,24	
3287	1379	23000	30000	36000	12,14	18,00	10,50	19,03	12,70	13,10	
4563	1983		28000	34000	14,50	21,30	13,90	22,38	24,20	25,80	
543	274		40000	48000	9,05	10,90	9,05	11,33	0,70	0,99	**8,0**
817	386		38000	45000	9,86	12,19	9,20	12,80	1,90	2,19	
1252	592	27000	36000	43000	10,50	13,50	9,65	14,20	3,11	4,05	
1252	592	27000	36000	43000	10,50	13,50	9,65	14,20	3,11	4,05	
1252	592	27000	36000	43000	10,50	13,50	9,65	14,20	3,11	4,05	
2237	917	26000	36000	43000	10,50	15,50	9,80	16,66	7,12	7,57	
3293	1379	23000	34000	40000	12,14	18,00	10,50	19,03	11,80	12,90	
3300	1360			32000			10,50			12,90	
3333	1423	21000	28000	34000	12,80	18,70	11,90	19,90	17,10	18,50	
4563	1983		28000	34000	14,50	21,30	13,90	22,38	28,10	30,30	
3200	1400		12000				10,30	19,00		16,00	
919	468		36000	42000	10,30	12,70	10,30	13,20	1,35	1,98	**9,0**
1327	668	24000	36000	43000	11,50	14,50	10,70	15,20	3,41	4,38	
1327	668	24000	36000	43000	11,50	14,50	10,70	15,20	–	4,20	
2467	1081	21000	34000	40000	11,60	16,20	11,60	17,44	7,38	8,54	
3356	1444	21000	32000	38000	13,85	19,46	12,10	20,48	14,70	16,00	
4575	1983	19000	28000	34000	14,50	21,30	13,90	22,38	19,00	21,80	
4659	2080		24000	30000	16,50	23,50	15,30	25,28	36,20	37,10	

High precision miniature ball bearings – **with flange**

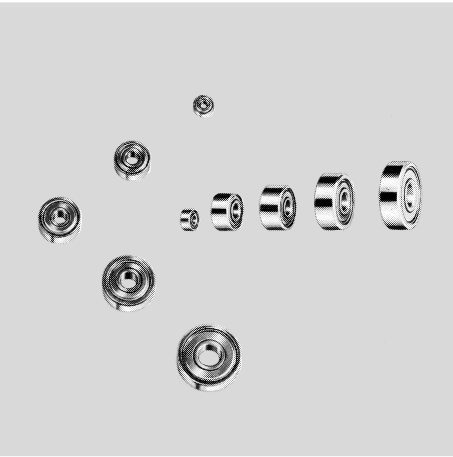

High precision miniature ball bearings are particularly suitable for use in small electric motors, office machinery, mechatronics, medical equipment, household appliances, etc.

They are available in open design, with non-contact shields/seals (suffix 2Z/2RU) and with contact seals (suffix 2RS).

Tolerances to DIN 620, tolerance class PN.

Accuracy class P6/P5/P4 available by agreement.

All miniature ball bearings are also available in stainless-steel versions (suffix VA) and by agreement with plastic cages.

Diameter [mm]	Designations			Dimensions [mm]							
	open	2Z	2 RS				open		2Z/2RS		
d				d	D	D_f	B	B_f	B_1	B_{f1}	r_s(min)
1,0	**F 681**			1,0	3,0	3,8	1,0	0,3	–	–	0,05
	F 691			1,0	4,0	5,0	1,6	0,5	–	–	0,10
1,2	**MF 41 X**			1,2	4,0	4,8	1,8	0,4	–	–	0,10
1,5	**F 681 X**	**F 681 X2Z**		1,5	4,0	5,0	1,2	0,4	2,0	0,6	0,05
	F 691 X	**F 691 X2Z**		1,5	5,0	6,5	2,0	0,6	2,6	0,8	0,15
	F 601 X	**F 601 X2Z**		1,5	6,0	7,5	2,5	0,6	3,0	0,8	0,15
2,0	**F 682**	**F 682 2Z**		2,0	5,0	6,1	1,5	0,5	2,3	0,6	0,08
	MF 52	**MF 52 2Z**		2,0	5,0	6,2	2,0	0,6	2,5	0,6	0,10
	F 692	**F 692 2Z**		2,0	6,0	7,5	2,3	0,6	3,0	0,8	0,15
	MF 62			2,0	6,0	7,2	2,5	0,6	–	–	0,15
	MF 72	**MF 72 2Z**		2,0	7,0	8,2	2,5	0,6	3,0	0,6	0,15
	F 602	**F 602 2Z**		2,0	7,0	8,5	2,8	0,7	3,5	0,9	0,15
2,5	**F 682 X**	**F 682 X2Z**		2,5	6,0	7,1	1,8	0,5	2,6	0,8	0,08
	F 692 X	**F 692 X2Z**		2,5	7,0	8,5	2,5	0,7	3,5	0,9	0,15
	MF 82 X			2,5	8,0	9,2	2,5	0,6	–	–	0,20
	F 602 X	**F 602 X2Z**		2,5	8,0	9,5	2,8	0,7	4,0	0,9	0,15
3,0	**MF 63**	**MF 63 2Z**		3,0	6,0	7,2	2,0	0,6	2,5	0,6	0,10
	F 683	**F 683 2Z**		3,0	7,0	8,1	2,0	0,5	3,0	0,8	0,10
	MF 83			3,0	8,0	9,2	2,5	0,6	–	–	0,15
	F 693	**F 693 2Z**		3,0	8,0	9,5	3,0	0,7	4,0	0,9	0,15
	MF 93	**MF 93 2Z**		3,0	9,0	10,2*	2,5	0,6	4,0	0,8	0,20
	F 603	**F 603 2Z**		3,0	9,0	10,5	3,0	0,7	5,0	1,0	0,15
	F 623	**F 623 2Z**		3,0	10,0	11,5	4,0	1,0	4,0	1,0	0,15
4,0	**MF 74**			4,0	7,0	8,2	2,0	0,6	–	–	0,10
		MF 74 2Z		4,0	7,0	8,2	–	–	2,5	0,6	0,10
	MF 84	**MF 84 2Z**		4,0	8,0	9,2	2,0	0,6	3,0	0,6	0,15
	F 684	**F 684 2Z**	**F 684 2RS**	4,0	9,0	10,3	2,5	0,6	4,0	1,0	0,10
	MF 104	**MF 104 2Z**	**MF 104 2RS**	4,0	10,0	11,2*	3,0	0,6	4,0	0,8	0,20
	F 694	**F 694 2Z**	**F 694 2RS**	4,0	11,0	12,5	4,0	1,0	4,0	1,0	0,15
	F 604	**F 604 2Z**		4,0	12,0	13,5	4,0	1,0	4,0	1,0	0,20
	F 624	**F 624 2Z**	**F 624 2RS**	4,0	13,0	15,0	5,0	1,0	5,0	1,0	0,20
	F 634	**F 634 2Z**	**F 634 2RS**	4,0	16,0	18,0	5,0	1,0	5,0	1,0	0,30

* This dimension is 0,4 mm larger in the 2Z version.

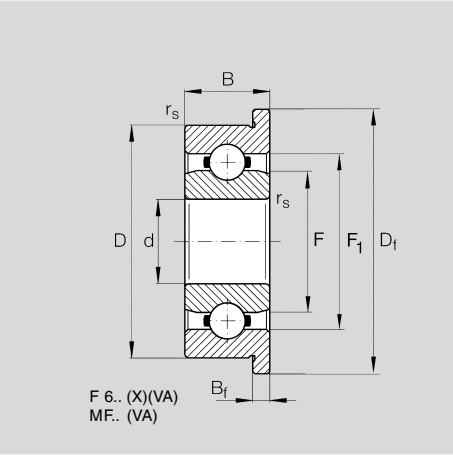

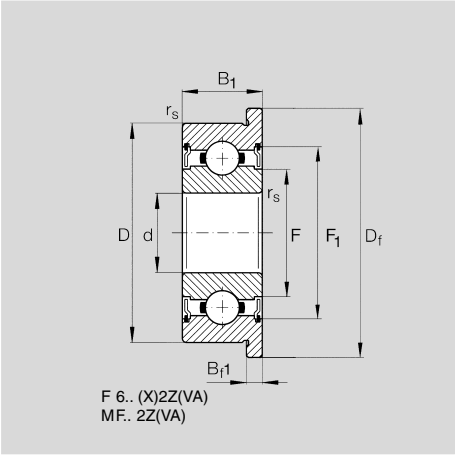

Basic load ratings [N]		Limiting speed [1/min]			Shoulder dimensions [mm]				Mass [g]		Diameter [mm]
		2RS	open/2Z	open/2Z	open		2Z/2RS		open	2Z	
dyn. C_r	stat. C_{0r}	Grease	Grease	Oil	F	F_1	F	F_1			d
96	26		130000	150000	1,60	2,40	–	–	0,04	–	**1,0**
141	37		100000	120000	2,02	3,18	–	–	0,14	–	
112	33		110000	130000	2,15	3,05	–	–	0,12	–	**1,2**
112	33		100000	120000	2,15	3,05	2,15	3,50	0,12	0,17	**1,5**
169	50		85000	100000	2,70	3,90	2,70	4,40	0,26	0,33	
330	99		75000	90000	3,00	4,80	3,00	5,40	0,38	0,50	
169	50		85000	100000	2,70	3,90	2,70	4,40	0,19	0,24	**2,0**
169	50		85000	100000	2,70	3,90	2,70	4,40	0,19	0,25	
330	99		75000	90000	3,00	4,80	3,00	5,40	0,35	0,45	
330	99		75000	90000	3,00	4,80	–	–	0,34	–	
386	129		63000	75000	3,85	5,65	3,15	6,20	0,50	0,60	
386	129		60000	71000	3,85	5,65	3,15	6,20	0,60	0,73	
209	74		71000	80000	3,70	4,90	3,70	5,40	0,24	0,42	**2,5**
386	129		63000	75000	3,85	5,65	3,85	6,20	0,50	0,68	
558	180		60000	67000	4,35	6,65	–	–	0,60	–	
552	177		60000	71000	4,10	6,44	4,10	7,04	0,72	0,99	
209	74		71000	80000	3,70	4,90	3,70	5,40	0,26	0,34	**3,0**
311	112		63000	75000	4,28	5,75	4,28	6,35	0,37	0,53	
395	141		60000	67000	5,00	6,80	–	–	0,59	–	
558	180		60000	67000	4,35	6,65	4,35	7,25	0,71	0,94	
571	189		56000	67000	4,86	7,20	4,35	7,90	0,83	1,30	
571	189		56000	67000	4,86	7,20	4,35	7,90	0,96	1,61	
631	219		50000	60000	4,80	7,08	4,35	7,98	1,65	1,85	
311	115		60000	67000	4,75	6,25	–	–	0,30	–	**4,0**
255	108		60000	67000	4,80	6,00	4,80	6,30	–	0,40	
395	141		56000	67000	5,00	6,80	5,00	7,40	0,47	0,64	
641	227	37800	53000	63000	5,20	7,50	5,20	8,10	0,74	1,15	
711	272	33600	48000	56000	6,15	8,35	5,60	8,95	1,04	1,50	
957	350	33600	48000	56000	6,15	8,95	5,60	9,85	1,91	1,97	
957	350		48000	56000	6,15	8,95	5,60	9,85	2,42	2,57	
1301	488	28800	40000	48000	6,95	10,45	6,00	11,35	3,44	3,54	
1340	523	25600	36000	43000	8,20	11,70	6,70	13,00	5,66	5,86	

High precision miniature ball bearings – **with flange**

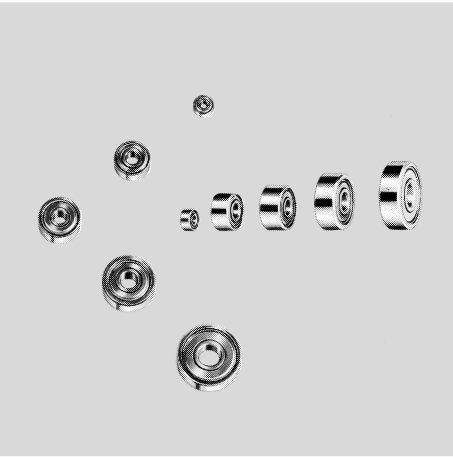

High precision miniature ball bearings are particularly suitable for use in small electric motors, office machinery, mechatronics, medical equipment, household appliances, etc.

They are available in open design, with non-contact shields/seals (suffix 2Z/2RU) and with contact seals (suffix 2RS).

Tolerances to DIN 620, tolerance class PN.

Accuracy class P6/P5/P4 available by agreement.

All miniature ball bearings are also available in stainless-steel versions (suffix VA) and by agreement with plastic cages.

Diameter [mm]	Designations				Dimensions [mm]							
	open	2Z	2RS	2RU				open		2Z/2RS/2RU		
d					d	D	D_f	B	B_f	B_1	B_{f1}	r_s(min)
5,0	**MF 85**				5,0	8,0	9,2	2,0	0,6	–	–	0,10
		MF 85 2Z			5,0	8,0	9,2	–	–	2,5	0,6	0,10
	MF 95	**MF 95 2Z**			5,0	9,0	10,2	2,5	0,6	3,0	0,6	0,15
	MF 105	**MF 105 2Z**	**MF 105 2RS**		5,0	10,0	11,2*	3,0	0,6	4,0	0,8	0,15
		MF 115 2Z	**MF 115 2RS**		5,0	11,0	12,6	–	–	4,0	0,8	0,15
	F 685	**F 685 2Z**	**F 685 2RS**		5,0	11,0	12,5	3,0	0,8	5,0	1,0	0,15
	F 695	**F 695 2Z**	**F 695 2RS**		5,0	13,0	15,0	4,0	1,0	4,0	1,0	0,20
	F 605	**F 605 2Z**			5,0	14,0	16,0	5,0	1,0	5,0	1,0	0,20
	F 625	**F 625 2Z**	**F 625 2RS**	**F 625 2RU**	5,0	16,0	18,0	5,0	1,0	5,0	1,0	0,30
	F 635	**F 635 2Z**	**F 635 2RS**		5,0	19,0	22,0	6,0	1,5	6,0	1,5	0,30
6,0	**MF 106**	**MF 106 2Z**			6,0	10,0	11,2	2,5	0,6	3,0	0,6	0,15
	MF 126	**MF 126 2Z**			6,0	12,0	13,2*	3,0	0,6	4,0	0,8	0,20
	F 686	**F 686 2Z**	**F 686 2RS**	**F 686 2RU**	6,0	13,0	15,0	3,5	1,0	5,0	1,1	0,15
	F 696	**F 696 2Z**	**F 696 2RS**		6,0	15,0	17,0	5,0	1,2	5,0	1,2	0,20
	F 606	**F 606 2Z**	**F 606 2RS**		6,0	17,0	19,0	6,0	1,2	6,0	1,2	0,30
	F 626	**F 626 2Z**	**F 626 2RS**	**F 626 2RU**	6,0	19,0	22,0	6,0	1,5	6,0	1,5	0,30
7,0	**MF 117**	**MF 117 2Z**			7,0	11,0	12,2	2,5	0,6	3,0	0,6	0,15
	MF 137	**MF 137 2Z**			7,0	13,0	14,2*	3,0	0,6	4,0	0,8	0,20
	F 687	**F 687 2Z**	**F 687 2RS**		7,0	14,0	16,0	3,5	1,0	5,0	1,1	0,15
	F 697	**F 697 2Z**	**F 697 2RS**		7,0	17,0	19,0	5,0	1,2	5,0	1,2	0,30
	F 607	**F 607 2Z**	**F 607 2RS**	**F 607 2RU**	7,0	19,0	22,0	6,0	1,5	6,0	1,5	0,30
	F 627	**F 627 2Z**	**F 627 2RS**		7,0	22,0	25,0	7,0	1,5	7,0	1,5	0,30
8,0	**MF 128**	**MF 128 2Z**			8,0	12,0	13,2*	2,5	0,6	3,5	0,8	0,15
	MF 148	**MF 148 2Z**	**MF 148 2RS**		8,0	14,0	15,6	3,5	0,8	4,0	0,8	0,20
	F 688	**F 688 2Z**	**F 688 2RS**	**F 688 2RU**	8,0	16,0	18,0	4,0	1,0	5,0	1,1	0,20
	F 688 W6	**F 688 2Z W6**	**F 688 2RS W6**		8,0	16,0	18,0	6,0	1,0	6,0	1,1	0,20
	F 698	**F 698 2Z**	**F 698 2RS**	**F 698 2RU**	8,0	19,0	22,0	6,0	1,5	6,0	1,5	0,30
	F 608	**F 608 2Z**	**F 608 2RS**	**F 608 2RU**	8,0	22,0	25,0	7,0	1,5	7,0	1,5	0,30
9,0	**F 679**	**F 679 2Z**			9,0	14,0	15,5	3,0	0,8	4,5	0,8	0,10
	F 689	**F 689 2Z**	**F 689 2RS**		9,0	17,0	19,0	4,0	1,0	5,0	1,1	0,20
	F 699	**F 699 2Z**	**F 699 2RS**		9,0	20,0	23,0	6,0	1,5	6,0	1,5	0,30
	F 609	**F 609 2Z**	**F 609 2RS**		9,0	24,0	27,0	7,0	1,5	7,0	1,5	0,30

* This dimension is 0,4 mm larger in the 2Z version.

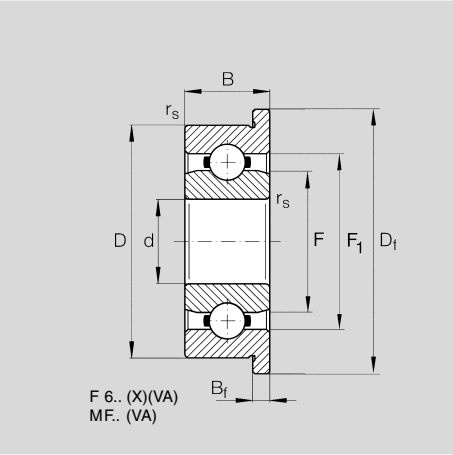

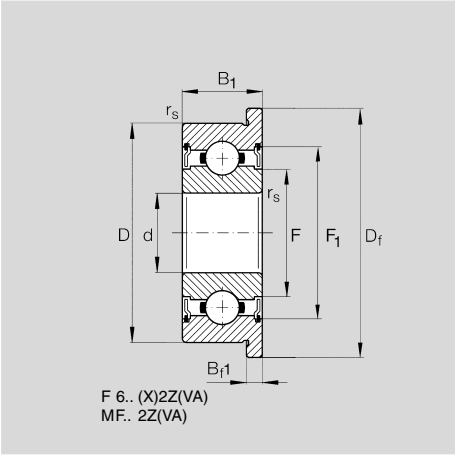

Basic load ratings [N]		Limiting speed [1/min]			Shoulder dimensions [mm]				Mass [g]		Diameter [mm]
		2RS	open/2Z/2RU	open/2Z/2RU	open		2Z/2RS/2RU		open	2Z	
dyn. C_r	stat. C_{0r}	Grease	Grease	Oil	F	F_1	F	F_1			d
308	120		53000	63000	5,75	7,25	–	–	0,33		**5,0**
219	90		53000	63000	5,80	7,00	5,80	7,40	–	0,42	
431	169		50000	60000	6,00	7,80	6,00	8,20	0,62	0,66	
431	169	40000	50000	60000	6,00	7,80	6,00	8,40	1,00	1,38	
716	282	39000	45000	53000	6,81	9,19	6,20	9,90	–	0,81	
716	282	39000	45000	53000	6,81	9,19	6,20	9,90	1,33	2,15	
1077	432	38000	43000	50000	7,50	10,50	6,60	11,20	2,65	2,73	
1329	507		40000	50000	7,79	11,28	6,90	12,20	3,83	4,12	
1729	675	33000	36000	43000	8,55	12,50	7,50	13,80	5,37	5,52	
2336	896	28000	32000	40000	10,12	15,02	8,50	16,50	9,26	9,65	
496	218		45000	53000	7,04	8,90	7,04	9,25	0,64	0,79	**6,0**
716	295		43000	50000	7,73	10,19	7,20	10,90	1,44	1,86	
1082	442	35000	40000	50000	8,00	11,00	7,40	11,70	2,21	3,06	
1340	523	35000	40000	45000	8,20	11,70	7,50	13,00	4,04	4,24	
2263	846	31000	38000	45000	8,92	13,75	8,20	14,80	6,47	7,42	
2336	896	28000	32000	40000	10,12	15,02	8,50	16,50	9,25	9,78	
455	202		43000	50000	8,04	9,96	8,04	10,26	0,69	0,81	**7,0**
541	276		40000	48000	9,35	11,15	9,00	11,75	1,64	2,17	
1173	513	31000	40000	50000	9,00	12,00	8,50	12,70	2,40	3,35	
1605	719	28000	36000	43000	10,40	13,60	9,30	14,30	5,54	5,79	
2336	896	28000	36000	43000	10,12	15,02	9,00	16,50	8,93	9,37	
3287	1379	23000	30000	36000	12,14	18,00	10,50	19,03	14,00	14,40	
543	274		40000	48000	9,05	10,90	9,05	11,33	0,81	1,14	**8,0**
817	386	28000	38000	45000	9,86	12,19	9,20	12,80	2,13	2,42	
1252	592	27000	36000	43000	10,50	13,50	9,65	14,20	3,53	4,51	
1252	592	27000	36000	43000	10,50	13,50	9,65	14,20	4,45	5,43	
2237	917	26000	36000	43000	10,50	15,50	9,80	16,66	8,25	8,70	
3293	1379	23000	34000	40000	12,14	18,00	10,50	19,03	13,10	14,20	
919	468		36000	42000	10,30	12,70	10,30	13,20	1,57	2,20	**9,0**
1327	668	24000	36000	43000	11,50	14,50	10,70	15,20	3,85	4,87	
2467	1081	21000	34000	40000	11,60	16,20	11,60	17,44	9,57	9,73	
3356	1444	21000	32000	38000	13,85	19,46	12,10	20,48	16,10	17,40	

High precision miniature ball bearings – **inch sizes**

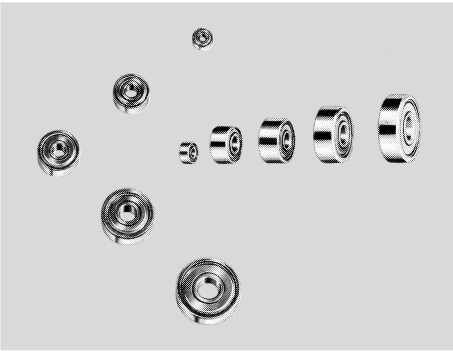

High precision miniature ball bearings in inch sizes are particularly suitable for use in small electric motors, office machinery, mechatronics, medical equipment, household appliances, etc.

Tolerances to DIN 620, tolerance class PN. Accuracy class P6/P5/P4 available by agreement.

All miniature ball bearings in inch sizes are also available in stainless-steel versions (suffix VA).

Diameter		Designations		Dimensions									
[inch]	[mm]			[inch]	[mm]	[inch]	[mm]	[inch]	[mm]	[inch]	[mm]	[inch]	[mm]
		open	2Z					open		2Z			
d				d		D		B		B_1		r_s(min)	
0,0400	**1,016**	**RO9**	–	0,0400	1,016	0,1250	3,175	0,0469	1,191	–	–	0,0039	0,1
0,0469	**1,191**	**RO**	**RO 2Z**	0,0469	1,191	0,1562	3,967	0,0625	1,588	0,0937	2,380	0,0039	0,1
0,0550	**1,397**	**R1**	**R1 2Z**	0,0550	1,397	1,1875	4,762	0,0781	1,984	0,1094	2,779	0,0039	0,1
0,0781	**1,984**	**R1-4**	**R1-4 2Z***	0,0781	1,984	0,2500	6,350	0,0937	2,380	0,1406	3,571	0,0039	0,1
0,0937	**2,380**	**R133**	–	0,0937	2,380	0,1875	4,762	0,0625	1,588	–	–	0,0039	0,1
		–	**R133 2Z***	–	–	0,1875	4,762	–	–	0,0937	2,380	0,0039	0,1
		R1-5	**R1-5 2Z***	–	–	0,3125	7,938	0,1094	2,779	0,1406	3,571	0,0059	0,15
0,1250	**3,175**	**R144J**	**R144J 2Z***	0,1250	3,175	0,2500	6,350	0,0937	2,380	0,1094	2,779	0,0039	0,1
		R144	**R144 2Z***	–	–	0,2500	6,350	0,0937	2,380	0,1094	2,779	0,0039	0,1
		R2-5	**R2-5 2Z***	–	–	0,3125	7,938	0,1094	2,779	0,1406	3,571	0,0039	0,1
		R2-6	**R2-6 2Z***	–	–	0,3750	9,525	0,1094	2,779	0,1406	3,571	0,0059	0,15
		R2	**R2 2Z***	–	–	0,3750	9,525	0,1562	3,967	0,1562	3,967	0,0018	0,3
		R2A	**R2A 2Z**	–	–	0,5000	12,700	0,1719	4,366	0,1719	4,366	0,0018	0,3
0,1562	**3,967**	**R155**	**R155 2Z***	0,1562	3,967	0,3125	7,938	0,1094	2,779	0,1250	3,175	0,0039	0,1
0,1875	**4,762**	**R156**	**R156 2Z***	0,1875	4,762	0,3125	7,938	0,1094	2,779	0,1250	3,175	0,0039	0,1
		R166	**R166 2Z***	–	–	0,3750	9,525	0,1250	3,175	0,1250	3,175	0,0039	0,1
		R3	**R3 2Z***	–	–	0,5000	12,700	0,1562	3,967	0,1960	4,978	0,0018	0,3
		R3A	**R3A 2Z**	–	–	0,6250	15,875	0,1960	4,978	0,1960	4,978	0,0018	0,3
0,2500	**6,350**	**R168**	**R168 2Z***	0,2500	6,350	0,3750	9,525	0,1250	3,175	0,1250	3,175	0,0039	0,1
		R188	**R188 2Z***	–	–	0,5000	12,700	0,1250	3,175	0,1875	4,762	0,0059	0,15
		R4	**R4 2Z***	–	–	0,6250	15,875	0,1960	4,978	0,1960	4,978	0,0018	0,3
		R4A	**R4A 2Z**	–	–	0,7500	19,050	0,2188	5,558	0,2812	7,142	0,0157	0,4
0,3125	**7,938**	**R1810**	**R1810 2Z***	0,3125	7,938	0,5000	12,700	0,1562	3,967	0,1562	3,967	0,0059	0,15
0,3750	**9,525**	**R6**	**R6 2Z**	0,3750	9,525	0,8750	22,225	0,2188	5,558	0,2812	7,142	0,0157	0,4
0,5000	**12,700**	**R8**	**R8 2Z**	0,5000	12,700	1,1250	28,575	0,2500	6,350	0,3125	7,938	0,0157	0,4
0,6250	**15,875**	**R10**	**R10 2Z**	0,6250	15,875	1,3750	34,925	0,2812	7,142	0,3438	8,733	0,0315	0,8
0,7500	**19,050**	**R12**	**R12 2Z**	0,7500	19,050	1,6250	41,275	0,3125	7,938	0,4375	11,113	0,0315	0,8

* These bearings are also available with an inner ring extended by 0,015" (0,3962 mm) on each side.

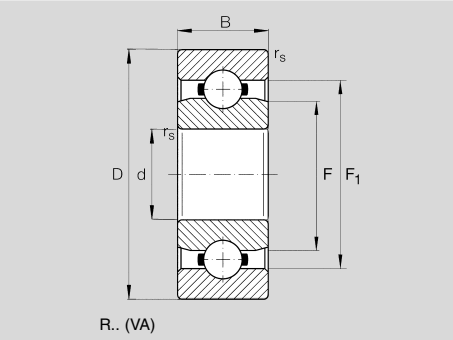

R.. (VA)

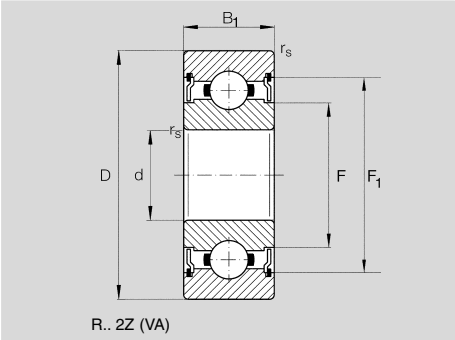

R.. 2Z (VA)

Basic load ratings [N]		Limiting speed [1/min]		Shoulder dimensions [mm]								Mass [g]		Diameter [inch]	Diameter [mm]
		open/2Z		open				2Z				open	2Z		
dyn.C_r	stat.C_{0r}	Grease	Oil	F		F_1		F		F_1				d	
110	30	130000	150000	0,0646	1,64	0,1024	2,60	–	–	–	–	0,05	–	**0,0400**	**1,016**
110	35	110000	130000	0,0846	2,15	0,1201	3,05	–	–	0,1378	3,50	0,10	0,15	**0,0469**	**1,191**
240	70	90000	110000	0,0917	2,33	0,1496	3,80	–	–	0,1614	4,10	0,15	0,19	**0,0550**	**1,397**
290	100	67000	80000	0,1543	3,92	0,2118	5,38	–	–	0,2264	5,75	0,40	0,53	**0,0781**	**1,984**
190	60	80000	95000	0,1173	2,98	0,1626	4,13	–	–	–	–	0,10	–	**0,0937**	**2,380**
150	55	80000	95000	0,1181	3,00	0,1496	3,80	–	–	0,1654	4,20	–	0,15		
560	180	60000	71000	0,1614	4,10	0,2520	6,40	0,1378	3,50	0,2756	7,00	0,60	1,15		
320	110	67000	80000	0,1543	3,92	0,2118	5,38	–	–	0,2264	5,75	0,27	0,32	**0,1250**	**3,175**
290	100	67000	80000	0,1543	3,92	0,2118	5,38	–	–	0,2264	5,75	0,27	0,40		
570	180	60000	67000	0,1713	4,35	0,2638	6,70	–	–	0,2795	7,10	0,50	0,74		
650	230	53000	63000	0,2047	5,20	0,2953	7,50	0,1811	4,60	0,3228	8,20	0,96	1,23		
640	220	56000	67000	0,1900	4,80	0,2787	7,08	–	–	0,3142	7,98	1,04	1,37		
650	230	53000	63000	0,2047	5,20	0,2953	7,50	0,1811	4,60	0,3228	8,20	3,30	3,30		
370	150	53000	63000	0,2177	5,53	0,2756	7,00	–	–	0,2874	7,30	0,51	0,61	**0,1562**	**3,967**
370	150	53000	63000	0,2177	5,53	0,2756	7,00	–	–	0,2874	7,30	0,40	0,45	**0,1875**	**4,762**
720	280	50000	60000	0,2343	5,95	0,3228	8,20	–	–	0,3465	8,80	0,81	0,85		
1330	500	43000	53000	0,2736	6,95	0,4114	10,45	0,2559	6,50	0,4390	11,15	2,21	2,95		
1510	630	38000	45000	0,3681	9,35	0,5059	12,85	0,3307	8,40	0,5335	13,55	4,75	5,08		
380	180	48000	56000	0,2787	7,08	0,3366	8,55	–	–	0,3484	8,85	0,57	0,60	**0,2500**	**6,350**
1100	450	40000	50000	0,3150	8,00	0,4331	11,00	0,2913	7,40	0,4567	11,60	1,60	2,32		
1510	630	38000	45000	0,3681	9,35	0,5059	12,85	0,3307	8,40	0,5335	13,55	4,46	4,54		
2380	910	36000	43000	0,3984	10,12	0,5913	15,02	0,3346	8,50	0,6496	16,50	7,48	10,00		
550	280	40000	48000	0,3681	9,35	0,4390	11,15	0,3543	9,00	0,4547	11,55	1,39	1,57	**0,3125**	**7,938**
3400	1450	32000	38000	0,5039	12,80	0,7362	18,70	0,4685	11,90	0,7835	19,90	9,02	11,70	**0,3750**	**9,525**
5210	2460	27000	32000	0,6693	17,00	0,9291	23,60	0,6299	16,00	0,9902	25,15	11,60	24,10	**0,5000**	**12,700**
6110	3350	21000	25000	0,9252	23,50	1,1850	30,10	–	–	1,2374	31,43	23,50	38,10	**0,6250**	**15,875**
8060	4500	17000	21000	1,0866	27,60	1,4055	35,70	–	–	1,4736	37,43	53,10	69,30	**0,7500**	**19,050**

High precision miniature ball bearings **with flange – inch sizes**

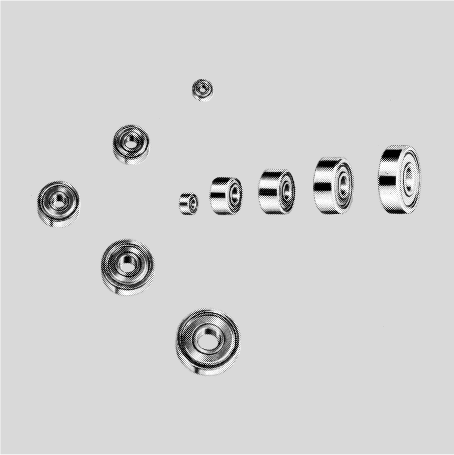

High precision miniature ball bearings in inch sizes with flange are particularly suitable for use in small electric motors, office machinery, mechatronics, medical equipment, household appliances, etc.

Tolerances to DIN 620, tolerance class PN.

Accuracy class P6/P5/P4 available by agreement.

All miniature ball bearings in inch sizes are also available in stainless-steel versions (suffix VA).

Diameter [inch]	Diameter [mm]	Designations open	Designations 2Z	Dimensions [inch]	[mm]	[inch]	[mm]	[inch]	[mm]	[inch]	[mm]	[inch]	[mm]	[inch]	[mm]	[inch]	[mm]	[inch]	[mm]
										open				2Z					
d				d		D		D_f [1]		B		B_f [2]		B_1		B_{f1} [2]		r_s(mm)	
0,0469	**1,191**	**FRO**	**FRO 2Z***	0,0469	1,191	0,1562	3,967	0,2030	5,156	0,0625	1,588	0,0130	0,330	0,0937	2,380	0,0310	0,787	0,0039	0,10
0,0550	**1,397**	**FR1**	**FR1 2Z***	0,0550	1,397	0,1875	4,762	0,2340	5,944	0,0781	1,984	0,0230	0,584	0,1094	2,779	0,0310	0,787	0,0039	0,10
0,0781	**1,984**	**FR1-4**	**FR1-4 2ZS***	0,0781	1,984	0,2500	6,350	0,2960	7,518	0,0937	2,380	0,0230	0,584	0,1406	3,571	0,0310	0,787	0,0039	0,10
0,0937	**2,380**	**FR133**	–	0,0937	2,380	0,1875	4,762	0,2340	5,944	0,0625	1,588	0,0180	0,457	–	–	–	–	0,0039	0,10
		–	**FR133 2ZS***	–	–	0,1875	4,762	0,2340	5,944	–	–	–	–	0,0937	2,380	0,0310	0,787	0,0039	0,10
		FR1-5	**FR1-5 2ZS***	–	–	0,3125	7,938	0,3590	9,119	0,1094	2,779	0,0230	0,584	0,1406	3,571	0,0310	0,787	0,0059	0,15
0,1250	**3,175**	**FR144J**	**FR144J 2ZS***	0,1250	3,175	0,2500	6,350	0,2960	7,518	0,0937	2,380	0,0230	0,584	0,1094	2,779	0,0310	0,787	0,0039	0,10
		FR144	**FR144 2ZS***	–	–	0,2500	6,350	0,2960	7,518	0,0937	2,380	0,0230	0,584	0,1094	2,779	0,0310	0,787	0,0039	0,10
		FR2-5	**FR2-5 2Z***	–	–	0,3125	7,938	0,3590	9,119	0,1094	2,779	0,0230	0,584	0,1406	3,571	0,0310	0,787	0,0039	0,10
		FR2-6	**FR2-6 2Z***	–	–	0,3750	9,525	0,4220	10,719	0,1094	2,779	0,0230	0,584	0,1406	3,571	0,0310	0,787	0,0059	0,15
		FR2	**FR2 2Z***	–	–	0,3750	9,525	0,4400	11,176	0,1562	3,967	0,0300	0,762	0,1562	3,967	0,0300	0,762	0,0018	0,30
0,1562	**3,967**	**FR155**	**FR155 2ZS***	0,1562	3,967	0,3125	7,938	0,3590	9,119	0,1094	2,779	0,0230	0,584	0,1250	3,175	0,0360	0,914	0,0039	0,10
0,1875	**4,762**	**FR156**	**FR156 2ZS***	0,1875	4,762	0,3125	7,938	0,3590	9,119	0,1094	2,779	0,0230	0,584	0,1250	3,175	0,0360	0,914	0,0039	0,10
		FR166	**FR166 2Z***	–	–	0,3750	9,525	0,4220	10,719	0,1250	3,175	0,0230	0,584	0,1250	3,175	0,0310	0,787	0,0039	0,10
		FR3	**FR3 2Z***	–	–	0,5000	12,700	0,5650	14,351	0,1960	4,978	0,0420	1,067	0,1960	4,978	0,0420	1,067	0,0018	0,30
0,2500	**6,350**	**FR168**	**FR168 2ZS***	0,2500	6,350	0,3750	9,525	0,4220	10,719	0,1250	3,175	0,0230	0,584	0,1250	3,175	0,0360	0,914	0,0039	0,10
		FR188	**FR188 2Z***	–	–	0,5000	12,700	0,5470	13,894	0,1250	3,175	0,0230	0,584	0,1875	4,762	0,0450	1,143	0,0059	0,15
		FR4	**FR4 2Z***	–	–	0,6250	15,875	0,6900	17,526	0,1960	4,978	0,0420	1,067	0,1960	4,978	0,0420	1,607	0,0018	0,30
0,3125	**7,938**	**FR1810**	**FR1810 2ZS***	0,3125	7,938	0,5000	12,700	0,5470	13,894	0,1562	3,967	0,0310	0,787	0,1562	3,967	0,0130	0,787	0,0059	0,15
0,3750	**9,525**	**FR6**	**FR6 2Z***	0,3750	9,525	0,8750	22,225	0,9690	24,613	0,2188	5,558	0,0620	1,575	0,2812	7,142	0,0620	1,575	0,0157	0,40
0,5000	**12,700**	**FR8**	**FR8 2Z***	0,5000	12,700	1,1250	28,575	1,2252	31,120	0,2500	6,350	0,0620	1,575	0,3125	7,938	0,0620	1,575	0,0157	0,40

* These bearings are also available with an inner ring extended by 0,015" (0,3962 mm) on each side.

[1] Diameter of flange
[2] Width of flange

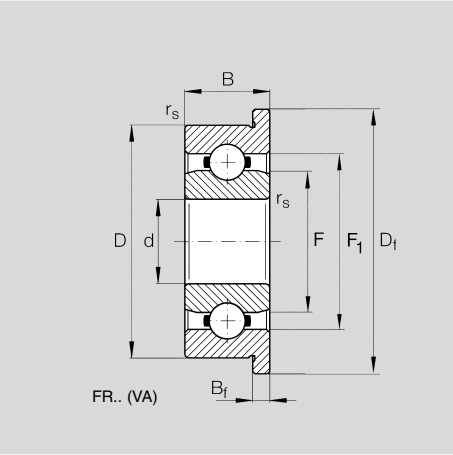

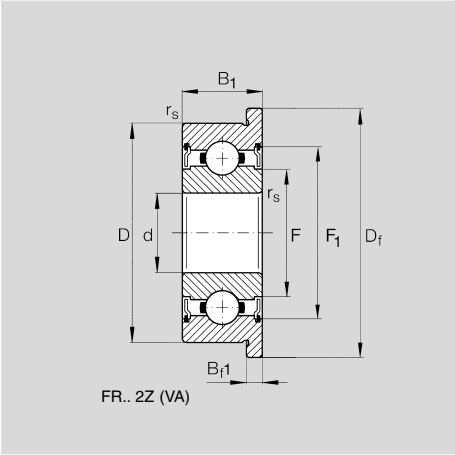

Basic load ratings [N]		Limiting speed [1/min]		Shoulder dimensions [mm]								Mass [g]		Diameter [inch]	Diameter [mm]
		open/2Z		open				2Z				open	2Z		
dyn.C_r	stat.C_{0r}	Grease	Oil	F		F_1		F		F_1					d
110	35	110000	130000	0,0846	2,15	0,1201	3,05	–	–	0,1378	3,50	0,12	0,20	**0,0469**	**1,191**
240	70	90000	110000	0,0917	2,33	0,1496	3,80	–	–	0,1614	4,10	0,19	0,25	**0,0550**	**1,397**
290	100	67000	80000	0,1543	3,92	0,2118	5,38	–	–	0,2264	5,75	0,46	0,61	**0,0781**	**1,984**
190	60	80000	95000	0,1173	2,98	0,1626	4,13	–	–	–	–	0,13	–	**0,0937**	**2,380**
150	55	80000	95000	0,1181	3,00	0,1496	3,80	–	–	0,1654	4,20	–	0,21		
560	180	60000	71000	0,1614	4,10	0,2520	6,40	0,1378	3,50	0,2756	7,00	0,67	1,25		
320	110	67000	80000	0,1543	3,92	0,2118	5,38	–	–	0,2264	5,75	0,33	0,40	**0,1250**	**3,175**
290	100	67000	80000	0,1543	3,92	0,2118	5,38	–	–	0,2264	5,75	0,33	0,48		
570	180	60000	67000	0,1713	4,35	0,2638	6,70	–	–	0,2795	7,10	0,57	0,84		
650	230	53000	63000	0,2047	5,20	0,2953	7,50	0,1811	4,60	0,3228	8,20	1,05	1,35		
640	220	56000	67000	0,1900	4,80	0,2787	7,08	–	–	0,3142	7,98	1,20	1,53		
370	150	53000	63000	0,2177	5,53	0,2756	7,00	–	–	0,2874	7,30	0,58	0,72	**0,1562**	**3,967**
370	150	53000	63000	0,2177	5,53	0,2756	7,00	–	–	0,2874	7,30	0,47	0,56	**0,1875**	**4,762**
720	280	50000	60000	0,2343	5,95	0,3228	8,20	–	–	0,3465	8,80	0,90	0,97		
1330	500	43000	53000	0,2736	6,95	0,4114	10,45	0,2559	6,50	0,4390	11,15	2,50	3,24		
380	180	48000	56000	0,2787	7,08	0,3366	8,55	–	–	0,3484	8,85	0,66	0,73	**0,2500**	**6,350**
1100	450	40000	50000	0,3150	8,00	0,4331	11,00	0,2913	7,40	0,4567	11,60	1,71	2,54		
1510	630	38000	45000	0,3681	9,35	0,5059	12,85	0,3307	8,40	0,5433	13,80	4,82	4,90		
550	280	40000	48000	0,3681	9,35	0,4390	11,15	0,3543	9,00	0,4547	11,55	1,54	1,72	**0,3125**	**7,938**
3350	1450	32000	38000	0,5039	12,80	0,7362	18,70	0,4685	11,90	0,7835	19,90	9,71	12,39	**0,3750**	**9,525**
5210	2460	27000	32000	0,6693	17,00	0,9291	23,60	0,6299	16,00	0,9902	25,15	13,00	25,60	**0,5000**	**12,700**

High precision miniature axial deep groove ball bearings

High precision miniature axial deep groove ball bearings consist of a shaft locating washer, a housing locating washer and a ball set retained by a sheet steel cage.

Version with suffix **M** has 2 raceways.
Version without suffix **M** has no raceways.

They can support high axial forces in one direction.

The bearings are not self-retaining.

The ball and cage assembly and the shaft and housing locating washers can therefore be fitted separately.

Tolerances to DIN 711, tolerance class PN.

Accuracy class P6, P5 available by agreement.

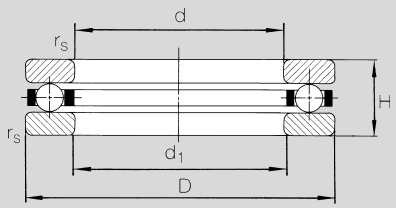

F.. (without raceways)

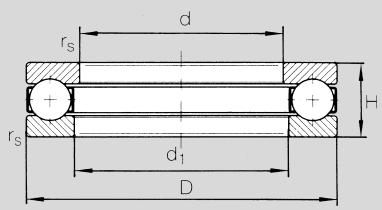

F.. M (with raceways)

Diameter [mm]	Designation	Dimensions [mm]				Basic load ratings [N]		Limiting speed [1/min]		Mass [g]
d		d_1	D	H	r_s(min)	dyn. C_r	stat. C_{0r}	nG Oil	nG Grease	
2	**F 2 - 6**	2,2	6	3,0	0,10	117	83	–	–	0,60
3	**F 3 - 8 M**	3,2	8	3,5	0,20	993	590	11700	9100	1,20
4	**F 4 - 9 M**	4,2	9	4,0	0,20	944	640	25000	16600	1,30
	F 4-10 M	4,2	10	4,0	0,20	925	661	11400	8800	1,35
5	**F 5-11**	5,2	11	4,5	0,15	284	284	–	–	2,40
	F 5-12 M	5,2	12	4,0	0,20	1056	942	11100	8500	1,40
6	**F 6-12 M**	6,2	12	4,5	0,30	1819	1588	20400	13600	1,45
	F 6-14 M	6,2	14	5,0	0,25	2155	1701	10800	8200	1,50
7	**F 7-13 M**	7,2	13	4,5	0,20	1773	1579	19600	13000	1,50
	F 7-15	7,2	15	5,0	0,20	558	548	–	–	4,40
	F 7-17 M	7,2	17	6,0	0,30	3086	2675	10500	7900	1,60
8	**F 8-16 M**	8,2	16	5,0	0,30	3933	3556	16700	11100	1,70
	F 8-19 M	8,2	19	7,0	0,40	3939	3476	10200	7600	1,80
9	**F 9-17**	9,2	17	5,0	0,20	578	527	–	–	5,10
	F 9-20 M	9,2	20	7,0	0,40	3855	3571	9900	7300	1,90
10	**F 10-18 M**	10,2	18	5,5	0,30	2470	2721	15000	10000	1,80

High precision miniature track rollers, single row

LR 6..NPPU

ø 4-8 mm

The design is based on radial ball bearings of series 600 but with a thick-walled outer ring. When the bearing is used normally as a track roller (in direct contact with a flat track or cam plate), the effective load ratings C_w and C_{0w} apply. The effective load ratings take account of the bending stress and elastic deformation of the outer ring under load and the resulting load distribution in the bearing. RS seals. Tolerances to DIN 620, tolerance class PN (except for the outer ring: D –0,05). Radial internal clearance: CN to DIN 620. Lubrication: lithium soap grease to DIN 51825 – K3N.

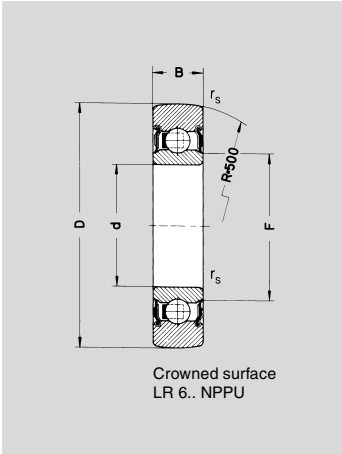

Diameter [mm]	Designation	Dimensions [mm]					Basic load ratings [N]				Limiting speed [1/min]	Mass [g]
d		d	D	B	F	r_s(min)	dyn. C_w	stat. C_{0w}	$F_{r\ perm}$	$F_{0r\ perm}$	nG	
4	**LR 604 NPPU**	4	13	4	6,0	0,2	860	350	700	700	24000	10
5	**LR 605 NPPU**	5	16	5	7,1	0,2	1190	490	980	980	23000	10
6	**LR 606 NPPU**	6	19	6	8,7	0,3	1740	700	1400	1400	22000	10
7	**LR 607 NPPU**	7	22	6	9,0	0,3	2130	870	1740	1740	20000	10
8	**LR 608 NPPU**	8	24	7	10,0	0,3	2750	1250	2500	2500	19000	20

High precision miniature track rollers, double row

LR 50..NPPU

ø 5-8 mm

Double row track rollers **without filling slots** are suitable for taking axial loads in both directions. The outer ring is of a thick-walled design. When the bearings are used normally as track rollers (in direct contact with a flat track or cam plate), the effective load ratings C_w and C_{0w} should be used. The effective load ratings take account of the bending stress and elastic deformation of the outer ring under load and the resulting load distribution in the bearing. Relubrication facility through the inner ring.
The grease must be pressed in slowly otherwise the seals can be damaged.

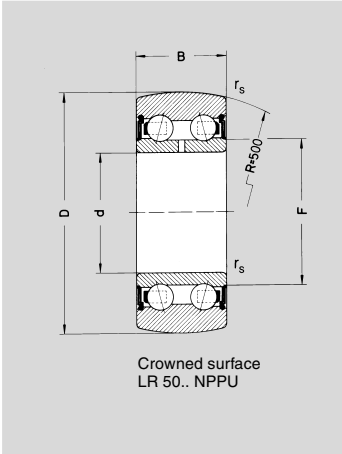

Diameter [mm]	Designation	Dimensions [mm]					Basic load ratings [N]				Limiting speed [1/min]	Mass [g]
d		d	D	B	F	r_s(min)	dyn. C_w	stat. C_{0w}	$F_{r\ perm}$	$F_{0r\ perm}$	nG	
5	**LR 50/5 NPPU**	5	17	7	8,1	0,2	1650	950	1900	1900	12000	10
6	**LR 50/6 NPPU**	6	19	9	8,3	0,3	2650	1310	2210	2720	11000	20
7	**LR 50/7 NPPU**	7	22	10	9,0	0,3	3300	1690	3380	3380	10000	20
8	**LR 50/8 NPPU**	8	24	11	10,5	0,3	4200	2360	3500	4720	10000	30

Corrosion-resistant versions (VA) available by agreement

High precision miniature profiled track rollers, double row

Miniature profiled track rollers are preferably used in conjunction with a shaft or other circular running surface.

The Gothic arch cross-section of the outer ring gives two point contact in the contact zone.
Various shaft diameters L_1 from 6 to 30 mm can be used. Hardened and ground shafts or shaft and support rail units can also be supplied.

Lubrication:

Lithium soap grease to DIN 51825 – K3N.

Sealing: sealing shields.

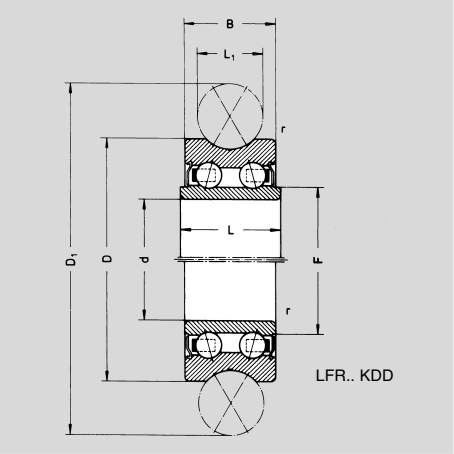

Diameter [mm]	Designation	Dimensions [mm]								Basic load ratings [N]				Mass [g]
d		d	D	B	L	L_1	F	D_1	r_s(min)	dyn. C_w	stat. C_{0w}	$F_{r\ perm}$	$F_{0r\ perm}$	
5	**LFR 50/5 KDD**	5	17	7	8	6	8,0	27,0	0,2	1610	890	1300	1780	10
8	**LFR 50/8 KDD**	8	24	11	11	6	10,5	34,0	0,3	4100	2280	1300	4560	20

High precision miniature angular contact ball bearings, double row

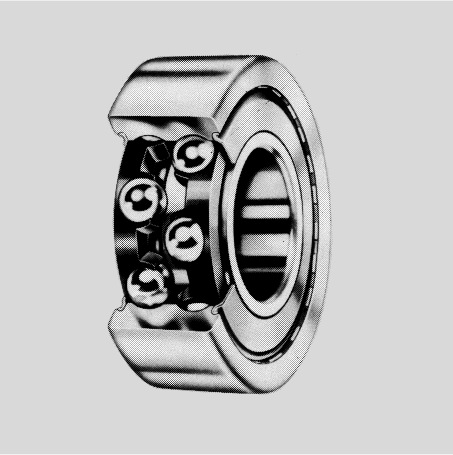

Contact angle 25°

Double row angular contact ball bearings **without filling slots** are suitable for supporting axial loads in both directions. The boundary dimensions correspond to DIN 628 Part 1. ..2Z bearings have sealing shields on both sides while ..2RS bearings have contact seals on both sides.

Tolerances to DIN 620, tolerance class PN.
Lubrication: lithium soap grease to DIN 51825 – K3N.

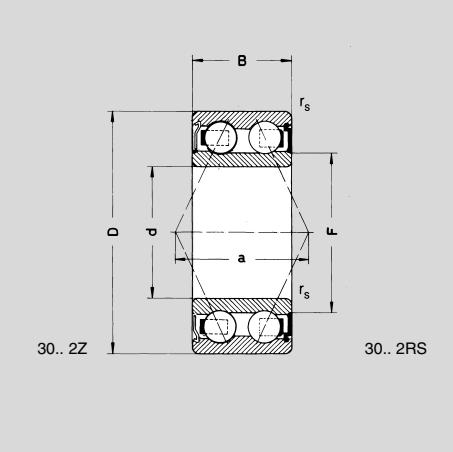

Diameter [mm]	Designations		Dimensions [mm]						Contact angle [°]	Basic load ratings [N]		Limiting speed [1/min]		Mass [g]
	2Z	2RS												
d			d	D	B	F	r_s(min)	a	W	dyn. C_r	stat. C_{0r}	nG Oil	nG Grease	
5	**30/5 2Z**	**30/5 2RS**	5	14	7,0	7,50	0,2	6,3	25	1810	950	30600	23500	8
6	**30/6 2Z**	**30/6 2RS**	6	17	9,0	8,30	0,3	8,8	25	3100	1400	29200	22500	10
7	**30/7 2Z**	**30/7 2RS**	7	19	10,0	9,00	0,3	10,0	25	3650	1700	27300	21000	12
8	**30/8 2Z**	**30/8 2RS**	8	22	11,0	10,50	0,3	10,7	25	5200	2610	26000	20000	20

Open versions available by agreement

High precision thin section ball bearings

Radial deep groove ball bearings of series 617, 618, 619, 638 are characterised by their small cross-section and relatively low mass.

They are available in open design, with non-contact shields/seals (suffix 2Z/2RU) and with contact seals (suffix 2RS).

They are therefore installed where the performance and larger section of conventional deep groove ball bearings would not be fully utilised.

Tolerances to DIN 620, tolerance class PN.

Diameter [mm]	Designations				Dimensions [mm]			
		Seal design						
d	open	2Z	2RS	2RU	d	D	B	r_s(min)
10	**61700**				10	15	3,0	0,15
		61700 2Z	**61700 2RS**		10	15	4,0	0,15
	61800	**61800 2Z**	**61800 2RS**	**61800 2RU**	10	19	5,0	0,30
	63800	**63800 2Z**	**63800 2RS**		10	19	7,0	0,30
	61900	**61900 2Z**	**61900 2RS**	**61900 2RU**	10	22	6,0	0,30
12	**61701**	**61701 2Z**	**61701 2RS**		12	18	4,0	0,20
	61801	**61801 2Z**	**61801 2RS**	**61801 2RU**	12	21	5,0	0,30
	63801	**63801 2Z**	**63801 2RS**		12	21	7,0	0,30
	61901*	**61901 2Z**	**61901 2RS**	**61901 2RU**	12	24	6,0	0,30
15	**ET 2015**	**–**	**–**		15	20	3,5	0,15
	ET 2115	**–**	**–**		15	21	3,5	0,15
	61702	**61702 2Z**	**61702 2RS**		15	21	4,0	0,20
	61802	**61802 2Z**	**61802 2RS**	**61802 2RU**	15	24	5,0	0,30
	63802	**63802 2Z**	**63802 2RS**		15	24	7,0	0,30
	61902	**61902 2Z**	**61902 2RS**	**61902 2RU**	15	28	7,0	0,30
16	**ET 2216**	**–**	**–**		16	22	4,0	0,15
17	**61703**	**61703 2Z**	**61703 2RS**		17	23	4,0	0,20
	61803	**61803 2Z**	**61803 2RS**	**61803 2RU**	17	26	5,0	0,30
	63803	**63803 2Z**	**63803 2RS**	**63803 2RU**	17	26	7,0	0,30
	61903	**61903 2Z**	**61903 2RS**	**61903 2RU**	17	30	7,0	0,30
20	**ET 2520**	**ET 2520 2Z**	**–**		20	25	4,0	0,15
	61704	**61704 2Z**	**61704 2RS**		20	27	4,0	0,20
	61804	**61804 2Z**	**61804 2RS**	**61804 2RU**	20	32	7,0	0,30
	63804	**63804 2Z**	**63804 2RS**		20	32	10,0	0,30
	61904	**61904 2Z**	**61904 2RS**	**61904 2RU**	20	37	9,0	0,30
25	**61705**	**–**	**61705 2RS**		25	32	4,0	0,20
	61805	**61805 2Z**	**61805 2RS**	**61805 2RU**	25	37	7,0	0,30
	63805	**63805 2Z**	**63805 2RS**		25	37	10,0	0,30
	61905	**61905 2Z**	**61905 2RS**	**61905 2RU**	25	42	9,0	0,30
30	**61706**	**–**	**–**	**61706 2RU**	30	37	4,0	0,20
	61806	**61806 2Z**	**61806 2RS**	**61806 2RU**	30	42	7,0	0,30
	61906	**61906 2Z**	**61906 2RS**	**61906 2RU**	30	47	9,0	0,30
35	**61707**	**–**	**61707 2RS**		35	44	5,0	0,30
	61807	**61807 2Z**	**61807 2RS**	**61807 2RU**	35	47	7,0	0,30
	61907	**61907 2Z**	**61907 2RS**	**61907 2RU**	35	55	10,0	0,60

*Also available with 13 mm bore

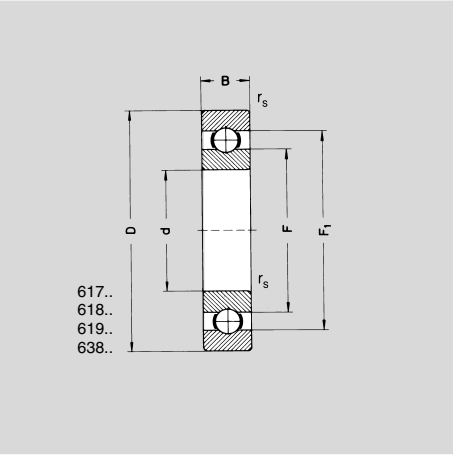

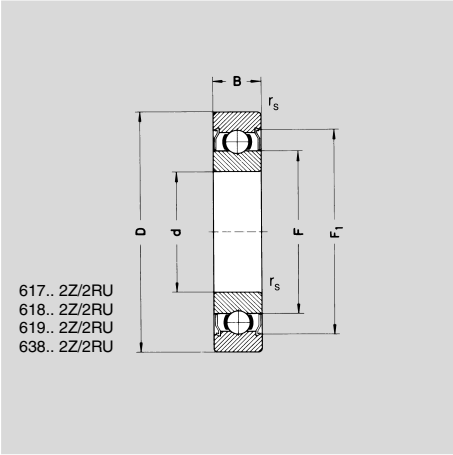

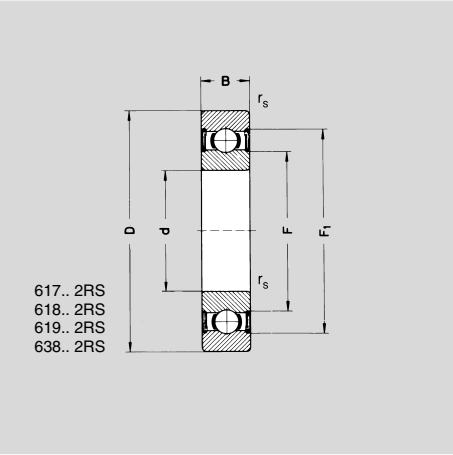

Basic load ratings [N]		Limiting speed [1/min]			Shoulder dimensions [mm]				Mass [g]	Diameter [mm]
		open/2Z/2RU	2RS	open/2Z/2RU	open		2Z/2RS/2RU			
dyn. C_r	stat. C_{0r}	Grease	Grease	Oil	F	F_1	F	F_1		d
855	435	15000	8200	17000	11,21	13,60	11,21	13,60	1,4	**10**
855	435	15000	8200	17000	11,21	13,60	11,21	14,20	1,9	
1716	840	37000	22000	43000	12,74	16,26	11,80	17,15	5,6	
1716	840	37000	22000	43000	12,74	16,26	11,80	17,15	7,4	
2695	1273	34000	21000	41000	13,90	18,20	13,20	19,37	10,0	
926	530	13000	7100	15000	13,86	16,10	13,86	16,70	3,1	**12**
1915	1041	33000	20000	39000	14,80	18,30	13,80	19,15	6,5	
1915	1041	33000	20000	39000	14,80	18,30	13,80	19,15	8,5	
2886	1466	31000	18000	36000	16,00	20,30	15,35	21,40	12,0	
942	582	–	–	26000	16,41	18,79	–	–	2,1	**15**
939	581	–	–	26000	16,90	19,10	–	–	2,4	
937	582	11000	6000	13000	16,86	19,10	16,86	19,70	3,6	
2073	1253	28000	16000	33000	17,80	21,30	16,80	22,15	7,6	
2073	1253	28000	16000	33000	17,80	21,30	16,80	22,15	10,0	
4321	2259	26000	15000	30000	18,80	24,20	18,80	25,30	19,0	
968	619	20000	–	24000	17,80	20,00	–	–	3,0	**16**
1000	658	9500	5200	11000	18,86	21,10	18,86	21,70	4,0	**17**
2283	1456	26000	15000	30000	19,80	23,30	18,80	24,30	8,2	
2283	1466	26000	15000	30000	19,80	23,30	18,80	24,30	11,0	
4588	2565	23000	13000	28000	21,00	26,80	21,00	27,80	20,0	
1011	691	18000	–	21000	19,75	21,90	19,75	21,90	4,12	**20**
1402	729	8500	4600	10000	22,36	24,60	22,36	25,44	5,9	
4015	2462	21000	13000	25000	23,20	28,20	22,60	29,52	18,0	
4015	2462	21000	13000	25000	23,20	28,20	22,60	29,52	24,0	
6381	3682	19000	11000	23000	25,20	32,00	23,65	33,50	40,0	
1091	838	7000	3800	8000	27,35	29,65	27,35	30,29	7,1	**25**
4303	2932	18000	10000	21000	28,20	33,20	28,20	34,12	24,0	
4303	2932	18000	10000	21000	28,20	33,20	28,20	34,12	32,0	
7001	4540	16000	9310	19000	30,90	37,50	30,90	39,45	47,0	
1143	947	5500	3000	7000	32,35	34,65	32,35	35,25	8,3	**30**
4538	3402	15000	9000	18000	33,11	38,20	33,11	39,20	27,0	
7242	5003	14000	8200	17000	35,10	41,95	35,10	44,05	53,0	
1866	1635	4900	2600	6000	38,00	41,05	38,00	42,20	15,0	**35**
4729	3821	13000	7500	16000	38,21	42,75	38,21	43,69	32,0	
10900	7818	12000	6800	14000	42,20	50,05	42,20	52,15	87,0	

High precision thin section ball bearings

Radial deep groove ball bearings of series 617, 618, 619, 638 are characterised by their small cross-section and relatively low mass.

They are available in open design, with non-contact shields/seals (suffix 2Z/2RU) and with contact seals (suffix 2RS).

They are therefore installed where the performance and larger section of conventional deep groove ball bearings would not be fully utilised.

Tolerances to DIN 620, tolerance class PN.

Diameter [mm]	Designations				Dimensions [mm]			
		Seal design						
d	open	2Z	2RS	2RU	d	D	B	r_s(min)
40	**61708**	**–**	**61708 2RS**		40	50	6,0	0,30
	61808	**61808 2Z**	**61808 2RS**	**61808 2RU**	40	52	7,0	0,30
	61908	**61908 2Z**	**61908 2RS**	**61908 2RU**	40	62	12,0	0,60
45	**61709**	**–**	**61709 2RS**		45	55	6,0	0,30
	61809	**61809 2Z**	**61809 2RS**		45	58	7,0	0,30
	61909	**61909 2Z**	**61909 2RS**		45	68	12,0	0,60
50	**61710**	**–**	**61710 2RS**		50	62	6,0	0,30
	61810	**61810 2Z**	**61810 2RS**	**61810 2RU**	50	65	7,0	0,30
	61910	**61910 2Z**	**61910 2RS**	**61910 2RU**	50	72	12,0	0,60
55	**61811**	**61811 2Z**	**61811 2RS**		55	72	9,0	0,50
	61911	**61911 2Z**	**61911 2RS**		55	80	13,0	1,50
60	**61812**	**61812 2Z**	**61812 2RS**	**61812 2RU**	60	78	10,0	1,50
	61912	**61912 2Z**	**61912 2RS**		60	85	13,0	1,50
65	**61813**	**61813 2Z**	**61813 2RS**		65	85	10,0	1,00
	61913	**61913 2Z**	**61913 2RS**		65	90	13,0	1,50
70	**61814**	**61814 2Z**	**61814 2RS**		70	90	10,0	1,00
	61914	**61914 2Z**	**61914 2RS**		70	100	16,0	1,50
75	**61815**	**61815 2Z**	**61815 2RS**		75	95	10,0	1,00
	61915	**61915 2Z**	**61915 2RS**		75	105	16,0	1,50
80	**61816**	**61816 2Z**	**61816 2RS**	**61816 2RU**	80	100	10,0	1,00
	61916	**61916 2Z**	**61916 2RS**		80	110	16,0	1,50
85	**61817**	**61817 2Z**	**61817 2RS**		85	110	13,0	1,50
	61917	**–**	**61917 2RS**		85	120	18,0	2,00
90	**61818**	**61818 2Z**	**61818 2RS**		90	115	13,0	1,50
	61918	**–**	**61918 2RS**		90	125	18,0	2,00

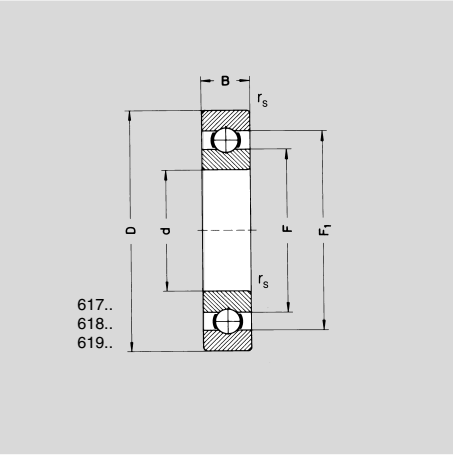

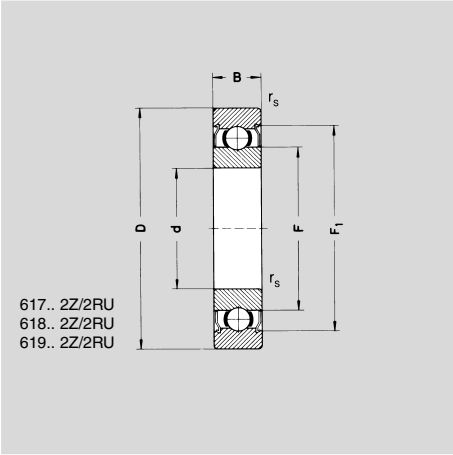

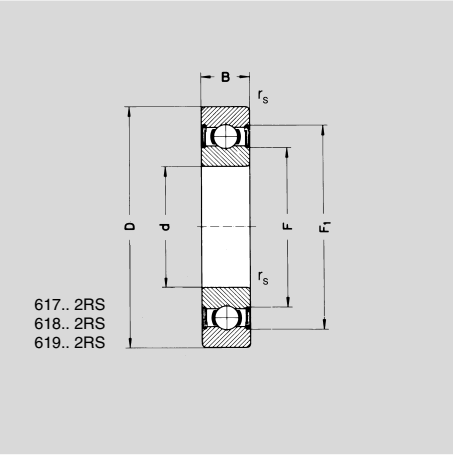

Basic load ratings [N]		Limiting speed [1/min]			Shoulder dimensions [mm]				Mass [g]	Diameter [mm]
		open/2Z/2RU	2RS	open/2Z/2RU	open		2Z/2RS/2RU			
dyn. C_r	stat. C_{0r}	Grease	Grease	Oil	F	F_1	F	F_1		d
2516	2233	4300	2300	5000	43,30	46,78	43,30	47,88	23,0	**40**
4923	4178	12000	6700	14000	43,21	48,10	43,21	48,99	35,0	
13678	9968	11000	6100	13000	46,90	55,55	46,90	57,55	131,0	
2580	2397	3900	2100	4600	48,30	51,80	48,30	53,20	25,0	**45**
6187	5381	11000	6000	13000	48,20	53,92	48,20	54,96	42,0	
14100	10830	9700	5500	11000	52,40	61,20	52,40	63,15	147,0	
2670	2640	3500	1900	4100	54,30	57,80	54,30	59,20	40,0	**50**
6610	6090	9600	5300	11000	54,20	59,92	54,20	60,96	52,0	
14540	11710	9000	5300	11000	56,90	65,70	56,90	67,65	133,0	
8800	8100	8700	4700	10000	60,30	67,00	60,30	67,00	83,0	**55**
16600	14100	8100	4500	9600	63,00	72,30	63,00	72,30	185,0	
11500	10600	8000	4300	9400	65,40	79,20	65,40	72,90	104,0	**60**
20200	17300	7500	4200	8900	68,00	78,20	68,00	78,20	192,0	
11900	11500	7300	4000	8600	71,40	78,90	71,40	78,90	126,0	**65**
17400	16100	7100	3900	8400	73,00	82,30	73,00	82,30	211,0	
12100	11900	6800	3700	8100	76,40	83,90	76,40	83,90	134,0	**70**
23700	21200	6400	3600	7600	79,50	90,60	79,50	90,60	342,0	
12500	12900	6400	3500	7600	81,40	88,90	81,40	88,90	142,0	**75**
24400	22600	6100	3300	7200	84,50	95,60	84,50	95,60	363,0	
12700	13300	6100	3300	7200	86,00	93,90	86,40	93,90	150,0	**80**
25000	24000	5700	3200	6800	89,50	101,00	89,50	100,60	382,0	
18700	19000	5600	3000	6600	92,50	103,00	93,00	102,30	266,0	**85**
31900	29600	5300	3000	6300	96,10	109,00	96,10	109,00	535,0	
19000	19700	5300	2900	6300	97,50	108,00	98,00	107,00	279,0	**90**
32800	31600	5100	2800	6000	101,00	114,00	101,30	114,00	565,0	

High precision thin section ball bearings – **stainless**

Deep groove ball bearings of series 617, 618, 619, 638 (2Z, 2RS) VA are characterised by their small cross-section and relatively low mass.

They are used where there is a risk of corrosion. The rings and balls are made from stainless-steel that gives excellent corrosion resistance.

The cages and sealing shields are also made from stainless-steel, while contact seals are made from NBR with steel reinforcement.

Cages made from plastic can also be supplied by agreement.

Tolerances to DIN 620, tolerance class PN.

Diameter [mm]	Designations			Dimensions [mm]			
		Seal design				open	
d	open	2Z	2RS	d	D	B	r_s(min)
10	**61700 VA**	**–**	**–**	10	15	3,0	0,15
		61700 2Z VA	**61700 2RS VA**	10	15	4,0	0,15
	61800 VA	**61800 2Z VA**	**61800 2RS VA**	10	19	5,0	0,30
	63800 VA	**63800 2Z VA**	**63800 2RS VA**	10	19	7,0	0,30
	61900 VA	**61900 2Z VA**	**61900 2RS VA**	10	22	6,0	0,30
12	**61701 VA**	**61701 2Z VA**	**61701 2RS VA**	12	18	4,0	0,20
	61801 VA	**61801 2Z VA**	**61801 2RS VA**	12	21	5,0	0,30
	63801 VA	**63801 2Z VA**	**63801 2RS VA**	12	21	7,0	0,30
	61901 VA	**61901 2Z VA**	**61901 2RS VA**	12	24	6,0	0,30
15	**61702 VA**	**61702 2Z VA**	**61702 2RS VA**	15	21	4,0	0,20
	61802 VA	**61802 2Z VA**	**61802 2RS VA**	15	24	5,0	0,30
	61902 VA	**61902 2Z VA**	**61902 2RS VA**	15	28	7,0	0,30
17	**61703 VA**	**61703 2Z VA**	**61703 2RS VA**	17	23	4,0	0,20
	61803 VA	**61803 2Z VA**	**61803 2RS VA**	17	26	5,0	0,30
	61903 VA	**61903 2Z VA**	**61903 2RS VA**	17	30	7,0	0,30
20	**61704 VA**	**61704 2Z VA**	**61704 2RS VA**	20	27	4,0	0,20
	61804 VA	**61804 2Z VA**	**61804 2RS VA**	20	32	7,0	0,30
	61904 VA	**61904 2Z VA**	**61904 2RS VA**	20	37	9,0	0,30
25	**61705 VA**	**–**	**61705 2RS VA**	25	32	4,0	0,20
	61805 VA	**61805 2Z VA**	**61805 2RS VA**	25	37	7,0	0,30
	61905 VA	**61905 2Z VA**	**61905 2RS VA**	25	42	9,0	0,30
30	**61706 VA**	**–**	**61706 2RU VA**	30	37	4,0	0,20
	61806 VA	**61806 2Z VA**	**61806 2RS VA**	30	42	7,0	0,30
	61906 VA	**61906 2Z VA**	**61906 2RS VA**	30	47	9,0	0,30
35	**61707 VA**	**–**	**61707 2RS VA**	35	44	5,0	0,30
	61807 VA	**61807 2Z VA**	**61807 2RS VA**	35	47	7,0	0,30
	61907 VA	**61907 2Z VA**	**61907 2RS VA**	35	55	10,0	0,60
40	**61708 VA**	**–**	**61708 2RS VA**	40	50	6,0	0,30
	61808 VA	**61808 2Z VA**	**61808 2RS VA**	40	52	7,0	0,30
	61908 VA	**61908 2Z VA**	**61908 2RS VA**	40	62	12,0	0,60
45	**61809 VA**	**61809 2Z VA**	**61809 2RS VA**	45	58	7,0	0,30
	61909 VA	**61909 2Z VA**	**61909 2RS VA**	45	68	12,0	0,60
50	**61810 VA**	**61810 2Z VA**	**61810 2RS VA**	50	65	7,0	0,30
	61910 VA	**61910 2Z VA**	**61910 2RS VA**	50	72	12,0	0,60
55	**61811 VA**	**–**	**61811 2RS VA**	55	72	9,0	0,30
60	**61812 VA**	**–**	**61812 2RS VA**	60	78	10,0	0,30
65	**61813 VA**	**–**	**61813 2RS VA**	65	85	10,0	0,60

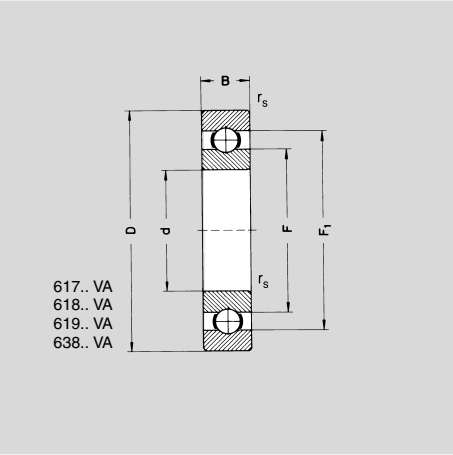

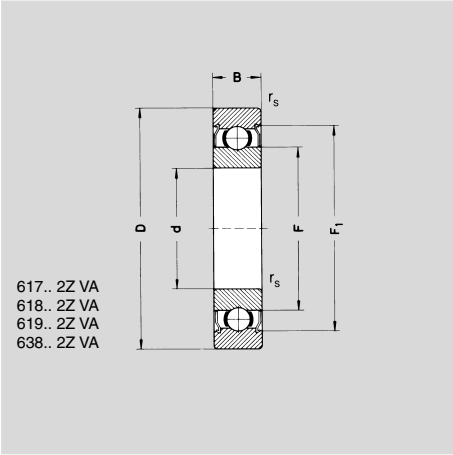

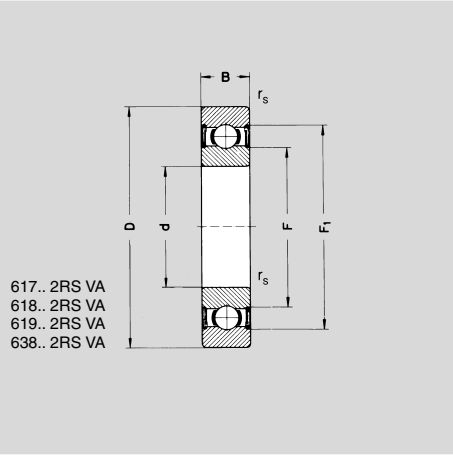

Basic load ratings [N]		Limiting speed [1/min]			Shoulder dimensions [mm]				Mass [g]	Diameter [mm]
		open/2Z	2RS	open/2Z	open		2Z/2RS		2Z	
dyn. C_r	stat. C_{0r}	Grease	Grease	Oil	F	F_1	F	F_1		d
855	435	15000	8200	17000	11,21	13,60	11,21	13,60	1,4	**10**
855	435	15000	8200	17000	11,21	13,60	11,21	14,20	1,9	
1716	840	37000	22000	43000	12,74	16,26	11,80	17,15	5,6	
1720	840	37000	22000	43000	12,74	16,26	11,80	17,15	7,4	
2695	1273	34000	21000	41000	13,90	18,20	13,20	19,37	10,0	
926	530	13000	7100	15000	13,86	16,10	13,86	16,70	3,1	**12**
1915	1041	33000	20000	39000	14,80	18,30	13,80	19,15	6,5	
1920	1040	33000	20000	39000	14,80	18,30	13,80	19,15	8,5	
2886	1466	31000	18000	36000	16,00	20,30	15,35	21,40	12,0	
937	582	11000	6000	13000	16,86	19,10	16,86	19,70	3,6	**15**
2073	1253	28000	16000	33000	17,80	21,30	16,80	22,15	7,6	
4321	2259	26000	15000	30000	18,80	24,20	18,80	25,30	19,0	
1000	658	9500	5200	11000	18,86	21,10	18,86	21,70	4,0	**17**
2233	1456	26000	15000	30000	19,80	23,30	18,80	24,30	8,2	
4588	2565	23000	13000	28000	21,00	26,80	21,00	27,80	20,0	
1040	729	8500	4600	10000	22,36	24,60	22,36	25,44	5,9	**20**
4015	2462	21000	13000	25000	23,20	28,20	22,60	29,52	18,0	
6381	3682	19000	11000	23000	25,20	32,00	23,65	33,50	40,0	
1090	838	7000	3800	8000	27,35	29,65	27,35	30,29	7,1	**25**
4303	2932	18000	10000	21000	28,20	33,20	28,20	34,12	24,0	
7001	4540	16000	9300	19000	30,90	37,50	30,90	39,45	47,0	
1140	947	5500	3000	7000	32,35	34,65	32,35	35,25	8,3	**30**
4538	3402	15000	9000	18000	33,11	38,20	33,11	39,20	27,0	
7242	5003	14000	8200	17000	35,10	41,95	35,10	44,05	53,0	
1870	1640	4900	2600	6000	38,00	41,05	38,00	42,20	15,0	**35**
4729	3821	13000	7500	16000	38,21	42,75	38,21	43,69	32,0	
10900	7818	12000	6800	14000	42,20	50,05	42,20	52,15	87,0	
2520	2230	4300	2300	5000	43,30	46,78	43,30	47,88	23,0	**40**
4923	4178	12000	6700	14000	43,21	48,10	43,21	48,99	35,0	
13678	9968	11000	6100	13000	46,90	55,55	46,90	57,55	131,0	
6187	5381	11000	6000	13000	48,20	53,92	48,20	54,96	42,0	**45**
14100	10830	9700	5500	11000	52,40	61,20	52,40	63,15	147,0	
6610	6090	9600	5300	11000	54,20	59,92	54,20	60,96	52,0	**50**
14540	11710	9000	5300	11000	56,90	65,70	56,90	67,65	133,0	
9100	8500	8400	4700	10000					84,0	**55**
11800	11100	7700	4300	9200					105,0	**60**
12300	12000	7000	4000	8500					130,0	**65**

High precision thin section ball bearings **with flanged** outer ring

Radial deep groove ball bearings with flanged outer ring of series F 617, 618, 619, 638 (2Z, 2RS) are characterised by their small cross-section and relatively low mass.

They are therefore installed where the performance and larger section of conventional deep groove ball bearings would not be fully utilised.

Tolerances to DIN 620, tolerance class PN.

Diameter [mm]	Designations			Dimensions [mm]					
		Seal design							
d	open	2Z	2RS/2RU	d	D	D_f	B	B_f	r_s(min)
10	**F 61700**	**–**	**–**	10	15	16,5	3,0	0,8	0,15
		F 61700 2Z	**F 61700 2RS**	10	15	16,5	4,0	0,8	0,15
	F 61800	**F 61800 2Z**	**F 61800 2RS**	10	19	21,0	5,0	1,0	0,30
	F 63800	**F 63800 2Z**	**F 63800 2RS**	10	19	21,0	7,0	1,5	0,30
	F 61900	**F 61900 2Z**	**F 61900 2RS**	10	22	25,0	6,0	1,5	0,30
12	**F 61701**	**F 61701 2Z**	**F 61701 2RS**	12	18	19,5	4,0	0,8	0,20
	F 61801	**F 61801 2Z**	**F 61801 2RS**	12	21	23,0	5,0	1,1	0,30
	F 63801	**F 63801 2Z**	**F 63801 2RS**	12	21	23,0	7,0	1,5	0,30
	F 61901	**F 61901 2Z**	**F 61901 2RS**	12	24	26,5	6,0	1,5	0,30
15	**F 61702**	**F 61702 2Z**	**F 61702 2RS**	15	21	22,5	4,0	0,8	0,20
	F 61802	**F 61802 2Z**	**F 61802 2RS**	15	24	26,0	5,0	1,1	0,30
	F 63802	**F 63802 2Z**	**F 63802 2RS**	15	24	26,0	7,0	1,5	0,30
	F 61902	**F 61902 2Z**	**F 61902 2RS**	15	28	30,5	7,0	1,5	0,30
17	**F 61703**	**F 61703 2Z**	**F 61703 2RS**	17	23	24,5	4,0	0,8	0,20
	F 61803	**F 61803 2Z**	**F 61803 2RS**	17	26	28,0	5,0	1,1	0,30
	F 63803	**F 63803 2Z**	**F 63803 2RS**	17	26	28,0	7,0	1,5	0,30
	F 61903	**F 61903 2Z**	**F 61903 2RS**	17	30	32,5	7,0	1,5	0,30
20	**F 61704**	**F 61704 2Z**	**F 61704 2RS**	20	27	28,5	4,0	0,8	0,20
	F 61804	**F 61804 2Z**	**F 61804 2RS**	20	32	35,0	7,0	1,5	0,30
	F 61904	**F 61904 2Z**	**F 61904 2RS**	20	37	40,0	9,0	2,0	0,30
25	**F 61705**	**–**	**F 61705 2RS**	25	32	34,0	4,0	1,0	0,20
	F 61805	**F 61805 2Z**	**F 61805 2RS**	25	37	40,0	7,0	1,5	0,30
	F 61905	**F 61905 2Z**	**F 61905 2RS**	25	42	45,0	9,0	2,0	0,30
30	**F 61706**	**–**	**F 61706 2RU**	30	37	39,0	4,0	1,0	0,20
	F 61806	**F 61806 2Z**	**F 61806 2RS**	30	42	45,0	7,0	1,5	0,30
	F 61906	**F 61906 2Z**	**F 61906 2RS**	30	47	50,0	9,0	2,0	0,30

Corrosion-resistant version (suffix VA) available by agreement

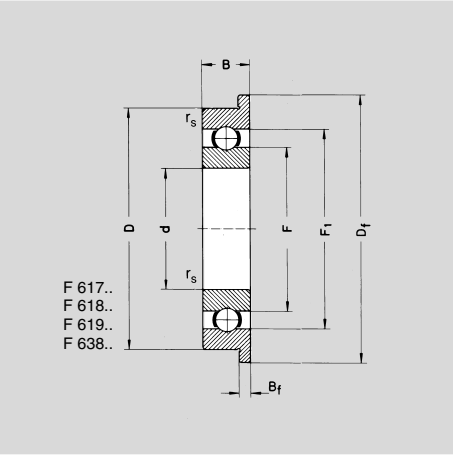

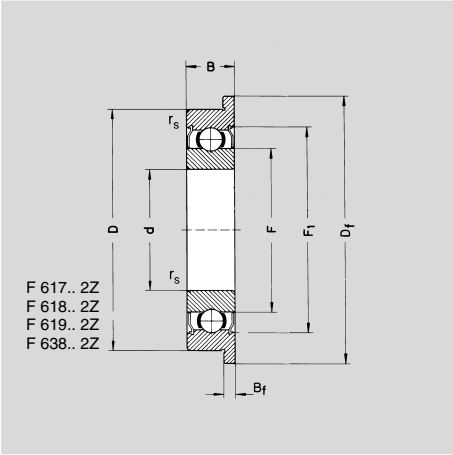

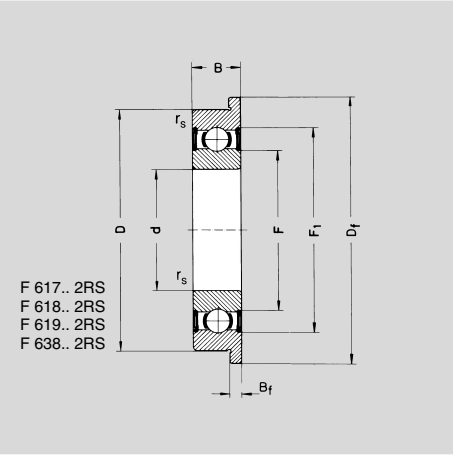

Basic load ratings [N]		Limiting speed [1/min]			Shoulder dimensions [mm]				Mass [g]	Diameter [mm]
		open/2Z	2RS	open/2Z/2RU	open		2Z/2RS/2RU		2Z	
dyn. C_r	stat. C_{0r}	Grease	Grease	Oil	F	F_1	F	F_1		d
855	435	15000	8200	17000	11,21	13,60	11,21	13,60	1,4	**10**
855	435	15000	8200	17000	11,21	13,60	11,21	14,20	1,9	
1716	840	37000	22000	43000	12,74	16,26	11,80	17,15	5,6	
1716	840	37000	22000	43000	12,74	16,26	11,80	17,15	7,4	
2695	1273	34000	21000	41000	13,90	18,20	13,20	19,37	10,0	
926	530	13000	7100	15000	13,86	16,10	13,86	16,70	3,1	**12**
1915	1041	33000	20000	39000	14,80	18,30	13,80	19,15	6,5	
1915	1041	33000	20000	39000	14,80	18,30	13,80	19,15	8,5	
2886	1466	31000	18000	36000	16,00	20,30	15,35	21,40	12,0	
937	582	11000	6000	13000	16,86	19,10	16,86	19,70	3,6	**15**
2073	1253	28000	16000	33000	17,80	21,30	16,80	22,15	7,6	
2073	1253	28000	16000	33000	17,80	21,30	16,80	22,15	10,0	
4321	2259	26000	15000	30000	18,80	24,20	18,80	25,30	19,0	
1000	658	9500	5200	11000	18,86	21,10	18,86	21,70	4,0	**17**
2283	1456	26000	15000	30000	19,80	23,30	18,80	24,30	8,2	
2283	1466	26000	15000	30000	19,80	23,30	18,80	24,30	11,0	
4588	2565	23000	13000	28000	21,00	26,80	21,00	27,80	20,0	
1402	729	8500	4600	10000	22,36	24,60	22,36	25,44	5,9	**20**
4015	2462	21000	13000	25000	23,20	28,20	22,60	29,52	18,0	
6381	3682	19000	11000	23000	25,20	32,00	23,65	33,50	40,0	
1091	838	7000	3800	8000	27,35	29,65	27,35	30,29	7,1	**25**
4303	2932	18000	10000	21000	28,20	33,20	28,20	34,12	24,0	
7001	4540	16000	9310	19000	30,90	37,50	30,90	39,45	47,0	
1143	947	5500	3000	7000	32,35	34,65	32,35	35,25	8,3	**30**
4538	3402	15000	9000	18000	33,11	38,20	33,11	39,20	27,0	
7242	5003	14000	8200	17000	35,10	41,95	35,10	44,05	53,0	

High precision angular contact ball bearings

Angular contact ball bearings are self-retaining, single row bearings.
Series 718.. has a contact angle of 30°, Series 72.. has a contact angle of 40°. They can therefore support axial loads in one direction as well as radial loads. Under radial load, an axial load component is induced which must be counteracted by adjustment against a second bearing.

The radial internal clearance of single row angular contact ball bearings is obtained only after installation and is dependent on adjustment against the opposing bearing.

Bearings of series 718.. / 72.. are generally fitted with a plastic cage.

Tolerances to DIN 620, tolerance class PN.

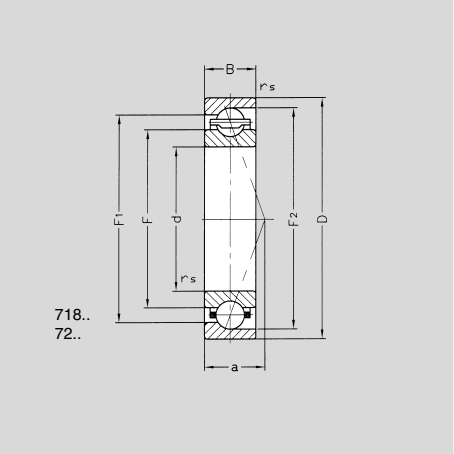

Diameter [mm]	Designation	Dimensions [mm]								Contact angle [°]	Basic load ratings [N]		Limiting speed [1/min]		Mass [g]
d		d	D	B	F	F_1	F_2	r_s(min)	a	W	dyn. C_r	stat. C_{0r}	nG Oil	nG Grease	
10	**71800 TN**	10	19	5	13,28	15,75	16,90	0,3	6,7	30	1790	940	49000	36000	5
12	**71801 TN**	12	21	5	15,28	17,74	18,90	0,3	7,3	30	1920	1060	40800	30000	6
15	**71802 TN**	15	24	5	18,28	20,72	21,90	0,3	8,2	30	2000	1170	32600	24000	7
17	**71803 TN**	17	26	5	20,28	22,72	23,90	0,3	8,7	30	2090	1300	28700	21100	8
20	**71804 TN**	20	32	7	23,97	28,04	29,90	0,3	11,0	30	4450	2550	24500	18000	18
25	**71805 TN**	25	37	7	28,97	33,04	34,90	0,3	12,5	30	4850	3100	19600	14400	24
30	**71806 TN**	30	42	7	34,70	37,30	–	0,3	18,6	30	5600	4550	18000	14000	26
20	**7204 BE 2RS**	20	47	14	28,40	38,90	–	0,6	21,5	40	17300	9500	–	9000	100
25	**7205 BE 2RS**	25	52	15	32,50	43,70	–	0,6	24,0	40	20200	11900	–	7700	110
30	**7206 VA***	30	62	16	–	–	–	1,0	27,0	40	20000	11000	12000	–	210

* = stainless

High precision four point contact ball bearings – extra-light series

Four point contact ball bearings are single row ball bearings. They can support axial loads from both directions as well as radial loads and thus act as double row angular contact ball bearings. The geometry of the raceways is specifically designed for this purpose. Both the inner and outer ring have raceways with a gothic arch cross-section.

The contact angle is 30°.

Bearings of series Q 18.. are generally fitted with a plastic cage.

Radial internal clearance: “Normal“ to DIN 620.

Tolerances to DIN 620, tolerance class PN.

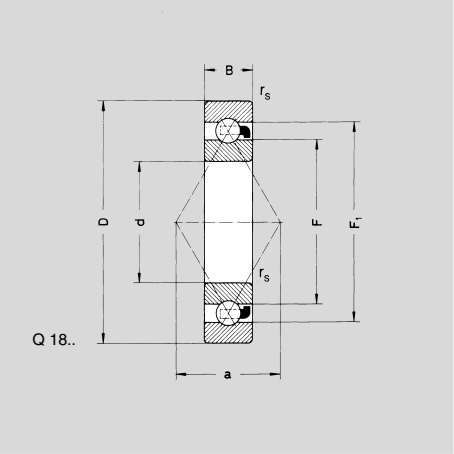

Diameter [mm]	Designation	Dimensions [mm]							Basic load ratings [N]		Limiting speed [1/min]		Mass [g]
d		d	D	B	F	F_1	a	r_s(min)	dyn. C_r	stat. C_{0r}	nG Oil	nG Grease	
10	**Q 1800 TN**	10	19	5	13,28	15,75	8,4	0,3	1900	990	35800	26300	5
12	**Q 1801 TN**	12	21	5	15,28	17,74	9,5	0,3	2110	1220	29700	21800	6
15	**Q 1802 TN**	15	24	5	18,28	20,72	11,3	0,3	2270	1460	23700	17400	7
17	**Q 1803 TN**	17	26	5	20,28	22,72	12,4	0,3	2330	1590	20700	15200	8
20	**Q 1804 TN**	20	32	7	23,97	28,04	15,0	0,3	5000	3050	17600	12900	18
25	**Q 1805 TN**	25	37	7	28,97	33,04	17,9	0,3	5500	3750	13900	10200	24

High precision deep groove ball bearings – light series

Radial deep groove ball bearings of series 160.. 2Z are characterised by their small cross-section and relatively low mass.

They are therefore installed where the performance and larger section of conventional deep groove ball bearings would not be fully utilised.

Tolerances to DIN 620, tolerance class PN.

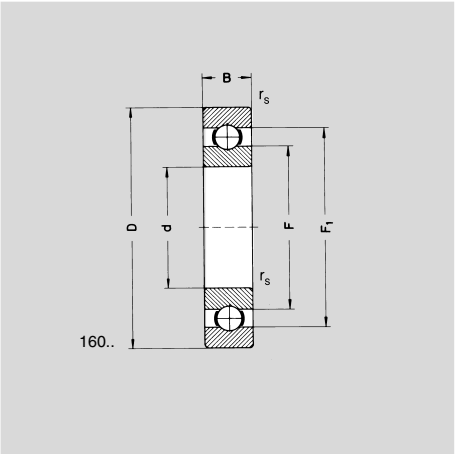

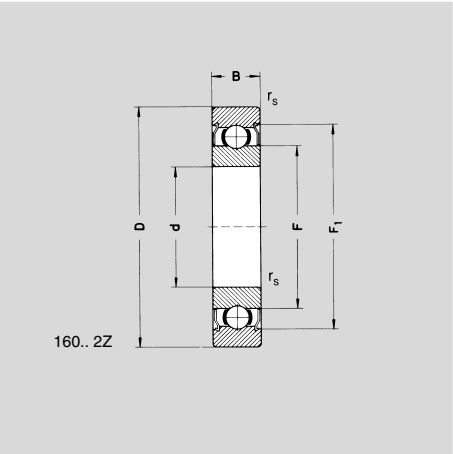

Diameter [mm]	Designations		Dimensions [mm]						Basic load ratings [N]		Limiting speed [1/min]		Mass [g]	
	open	2Z											open	2Z
d			d	D	B	F	F_1	r_s(min)	dyn. C_r	stat. C_{0r}	nG Oil	nG Grease		
10	**16100**	**16100 2Z**	10	28	8	12,00	26,0	0,3	4580	1970	34000	28000	25	25
12	**16101**	**16101 2Z**	12	30	8	14,00	28,0	0,3	5100	2370	32000	26000	21	21
	16001		12	28	7	14,00	26,0	0,3	5100	2370	32000	26000	21	
15	**16002**		15	32	8	20,60	27,0	0,3	5600	2850	26400	22000	27	
		16002 2Z	15	32	8	18,50	29,1	0,3	5600	2850	26400	22000		27
17	**16003**		17	35	8	23,20	29,7	0,3	6100	3250	22800	19000	32	
		16003 2Z	17	35	8	21,80	31,5	0,3	6100	3250	22800	19000		32
20	**16004**		20	42	8	26,60	35,0	0,3	7900	4500	20400	17000	50	
		16004 2Z	20	42	8	30,35	37,9	0,3	6600	4200	20400	17000		50
25	**16005**		25	47	8	31,80	40,2	0,3	6800	5600	18000	15000	59	
		16005 2Z	25	47	8	30,35	41,6	0,3	6600	4200	18000	15000		59
30	**16006**		30	55	9	38,90	48,1	0,3	11200	7400	14400	12000	85	
		16006 2Z	30	55	9	35,10	48,1	0,3	7200	5000	14400	12000		85
35	**16007**		35	62	9	45,40	53,6	0,3	12200	8900	12000	10000	110	
		16007 2Z	35	62	9	42,20	52,1	0,3	10800	7600	12000	10000		110
40	**16008**		40	68	9	49,78	57,0	0,3	12600	9700	12000	9500	120	
		16008 2Z	40	68	9	48,37	58,5	0,3	6100	5300	12000	9500		130
45	**16009**		45	75	10	49,00	70,0	0,6	15600	12170	10000	8400	170	
50	**16010**		50	80	10	54,00	76,0	0,6	16200	13100	9400	7900	260	

Larger sizes available by agreement

High precision deep groove ball bearings

High precision radial ball bearings of series 60.., 62.. and 63.. can support axial loads from both directions as well as radial loads.

They are available in open design, with non-contact shields/seals (suffix 2Z/2RU) and with contact seals (suffix 2RS).

They are also available by agreement with other seal types and in a design with a plastic cage.

Tolerances to DIN 620, tolerance class PN. Other tolerance classes (P6, P5, and P4) are available by agreement.

Diameter [mm]	Designations				Dimensions [mm]					Basic load ratings [N]		Limiting speed [1/min]		Mass [g]
	open	2Z	2RS	2RU			2Z/2RS/2RU					open/2Z/2RU	2RS	
d					D	B	F	F_1	r_s(min)	dyn. C_r	stat. C_{0r}	nG	nG	
10	**6000**	**6000 2Z**	**6000 2RS**		26	8	14,4	21,40	0,3	4600	1950	28000	19000	19
	6200	**6200 2Z**	**6200 2RS**	**6200 2RU**	30	9	16,7	23,20	0,6	5100	2350	24000	17000	32
	6300	**6300 2Z**	**6300 2RS**		35	11	17,7	27,40	0,6	8100	3450	20000	15000	54
12	**6001**	**6001 2Z**	**6001 2RS**	**6001 2RU**	28	8	16,7	23,40	0,3	5100	2350	26000	17000	22
	6201	**6201 2Z**	**6201 2RS**	**6201 2RU**	32	10	18,2	25,90	0,6	6900	3100	22000	15000	37
	6301	**6301 2Z**	**6301 2RS**	**6301 2RU**	37	12	19,3	29,90	1,0	9700	4200	19000	13000	61
15	**6002**	**6002 2Z**	**6002 2RS**		32	9	20,3	27,00	0,3	5600	2850	22000	14000	30
	6202	**6202 2Z**	**6202 2RS**	**6202 2RU**	35	11	21,5	29,20	0,6	7800	3750	19000	13000	45
	6302	**6302 2Z**	**6302 2RS**	**6302 2RU**	42	13	24,5	34,90	1,0	11400	5400	17000	12000	85
17	**6003**	**6003 2Z**	**6003 2RS**		35	10	22,8	29,50	0,3	6000	3250	19000	13000	39
	6203	**6203 2Z**	**6203 2RS**	**6203 2RU**	40	12	24,2	32,90	0,6	9600	4750	17000	12000	65
	6303	**6303 2Z**	**6303 2RS**		47	14	27,5	38,90	1,0	13600	6600	16000	11000	111
20	**6004**	**6004 2Z**	**6004 2RS**		42	12	27,2	35,10	0,6	9400	5000	17000	11000	69
	6204	**6204 2Z**	**6204 2RS**		47	14	28,5	38,70	1,0	12700	6500	15000	10000	110
	6304	**6304 2Z**	**6304 2RS**	**6304 2RU**	52	15	30,0	41,70	1,0	15900	7800	13000	9000	148
22	**60/22**	**60/22 2Z**	**60/22 2RS**	**60/22 2RU**	50	14	29,0	45,00	1,0	12900	6800	14000	9700	117
25	**6005**	**6005 2Z**	**6005 2RS**	**6005 2RU**	47	12	32,0	40,30	0,6	11200	6500	15000	10000	80
	6205	**6205 2Z**	**6205 2RS**	**6205 2RU**	52	15	34,0	44,20	1,0	14000	7800	12000	8500	130
	6305	**6305 2Z**	**6305 2RS**		62	17	38,1	51,00	1,1	20600	11300	11000	7500	232
30	**6006**	**6006 2Z**	**6006 2RS**		55	13	38,2	47,10	1,0	13200	8300	12000	8000	120
	6206*	**6206 2Z**	**6206 2RS**		62	16	40,3	52,10	1,0	19500	11200	10000	7500	200
	6306	**6306 2Z**	**6306 2RS**		72	19	44,9	62,90	1,1	26500	15000	9000	6300	350
35	**6007**	**6007 2Z**	**6007 2RS**		62	14	44,0	54,30	1,0	16000	10300	10000	7000	151
	6207				72	17	47,0	59,95	1,1	25500	15400	9000		290
		6207 2Z	**6207 2RS**		72	17	47,6	65,70	1,1	25500	15400	9000	6300	290
40	**6008**	**6008 2Z**	**6008 2RS**		68	15	44,0	63,0	1,0	16800	11400	9400	6300	191
	6208*	**6208 2Z**	**6208 2RS**		80	18	47,0	73,0	1,1	32900	20000	8400	5600	349
	6308	**6308 2Z**	**6308 2RS**		90	23	47,0	81,0	1,5	40600	23700	7900	4700	625
45	**6009**	**6009 2Z**	**6009 2RS**		75	16	49,0	70,0	1,0	21100	15300	8400	5600	241
	6209	**6209 2Z**	**6209 2RS**		85	19	52,0	78,0	1,1	32900	20300	7900	5300	404
	6309	**6309 2Z**	**6309 2RS**		100	25	52,0	91,0	1,5	53100	31600	7100	4700	828
50	**6010**	**6010 2Z**	**6010 2RS**		80	16	54,0	75,0	1,0	22000	16500	7900	5300	260
	6210	**6210 2Z**	**6210 2RS**		90	20	57,0	83,0	1,1	34800	23300	7100	4700	460
	6310	**6310 2Z**	**6310 2RS**		110	27	60,0	100,0	2,0	61900	37600	6300	4200	1006

Larger sizes available by agreement

*Also available with a larger ball set (E)

High precision deep groove ball bearings – **stainless**

Radial deep groove ball bearings of series 60..VA, 62..VA and 63..VA (2Z VA, 2RS VA, and 2RU VA) are used where there is a risk of corrosion. The rings and balls are made from stainless-steel that gives excellent corrosion resistance.

The cages and sealing shields are also made from stainless-steel, while contact and non-contact seals are made from NBR with steel reinforcement.

These bearings are also available by agreement with plastic cages.

Tolerances to DIN 620, tolerance class PN.

Diameter [mm]	Designations				Dimensions [mm]			
		Seal design						
d	open	2Z	2RS	2RU	d	D	B	r_s(min)
10	**6000 VA**	**6000 2Z VA**	**6000 2RS VA**	**6000 2RU VA**	10	26	8,0	0,30
	6200 VA	**6200 2Z VA**	**6200 2RS VA**	**6200 2RU VA**	10	30	9,0	0,60
	6300 VA	**6300 2Z VA**	**6300 2RS VA**		10	35	11,0	0,60
12	**6001 VA**	**6001 2Z VA**	**6001 2RS VA**	**6001 2RU VA**	12	28	8,0	0,30
	6201 VA	**6201 2Z VA**	**6201 2RS VA**	**6201 2RU VA**	12	32	10,0	0,60
	6301 VA	**6301 2Z VA**	**6301 2RS VA**		12	37	12,0	1,00
15	**6002 VA**	**6002 2Z VA**	**6002 2RS VA**	**6002 2RU VA**	15	32	9,0	0,30
	6202 VA	**6202 2Z VA**	**6202 2RS VA**	**6202 2RU VA**	15	35	11,0	0,60
	6302 VA	**6302 2Z VA**	**6302 2RS VA**		15	42	13,0	1,00
17	**6003 VA**	**6003 2Z VA**	**6003 2RS VA**	**6003 2RU VA**	17	35	10,0	0,30
	6203 VA	**6203 2Z VA**	**6203 2RS VA**	**6203 2RU VA**	17	40	12,0	0,60
	6303 VA	**6303 2Z VA**	**6303 2RS VA**		17	47	14,0	1,00
20	**6004 VA**	**6004 2Z VA**	**6004 2RS VA**	**6004 2RU VA**	20	42	12,0	0,60
	6204 VA	**6204 2Z VA**	**6204 2RS VA**	**6204 2RU VA**	20	47	14,0	1,00
	6304 VA	**6304 2Z VA**	**6304 2RS VA**		20	52	15,0	1,10
25	**6005 VA**	**6005 2Z VA**	**6005 2RS VA**	**6005 2RU VA**	25	47	12,0	0,60
	6205 VA	**6205 2Z VA**	**6205 2RS VA**	**6205 2RU VA**	25	52	15,0	1,00
	6305 VA	**6305 2Z VA**	**6305 2RS VA**		25	62	17,0	1,10
30	**6006 VA**	**6006 2Z VA**	**6006 2RS VA**		30	55	13,0	1,00
	6206 VA	**6206 2Z VA**	**6206 2RS VA**		30	62	16,0	1,00
	6306 VA	**6306 2Z VA**	**6306 2RS VA**		30	72	19,0	1,10
35	**6007 VA**	**6007 2Z VA**	**6007 2RS VA**		35	62	14,0	1,00
	6207 VA	**6207 2Z VA**	**6207 2RS VA**		35	72	17,0	1,10
40	**6008 VA**		**6008 2RS VA**		40	68	15,0	1,00
	6208 VA		**6208 2RS VA**		40	80	18,0	1,10
45	**6009 VA**		**6009 2RS VA**		45	75	16,0	1,00
	6209 VA		**6209 2RS VA**		45	85	19,0	1,10
50	**6010 VA**		**6010 2RS VA**		50	80	16,0	1,00
	6210 VA		**6210 2RS VA**		50	90	20,0	1,10
55	**6011 VA**		**6011 2RS VA**		55	90	18,0	1,10
	6211 VA		**6211 2RS VA**		55	100	21,0	1,50
60	**6012 VA**		**6012 2RS VA**		60	95	18,0	1,10
	6212 VA		**6212 2RS VA**		60	110	22,0	1,50
65	**6013 VA**		**6013 2RS VA**		65	100	18,0	1,10
	6213 VA		**6213 2RS VA**		65	120	23,0	1,50
70	**6014 VA**		**6014 2RS VA**		70	110	20,0	1,10

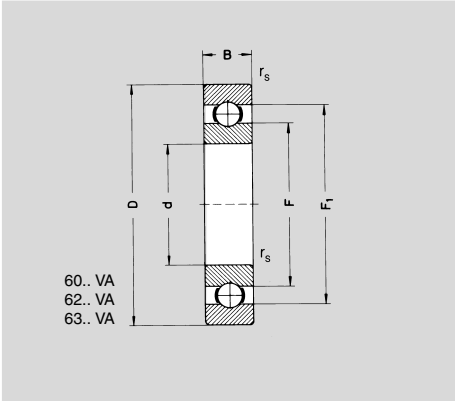

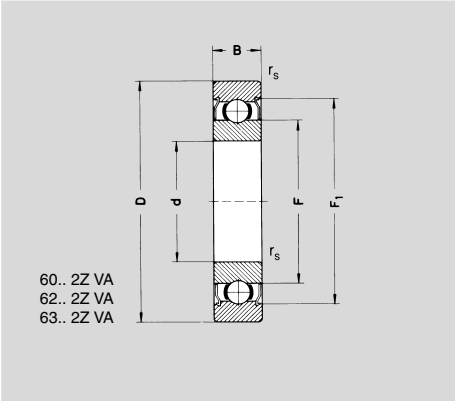

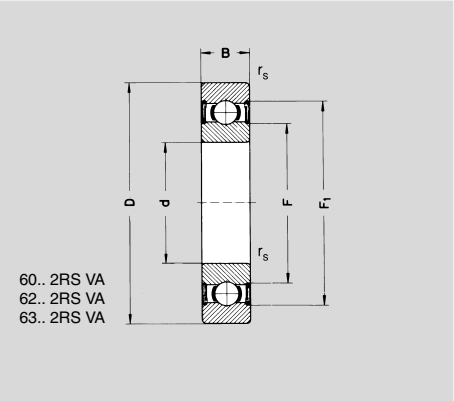

Basic load ratings [N]		Reference speed [1/min]			Shoulder dimensions [mm]				Mass [g]	Diameter [mm]
		open/2Z/2RU	2RS	open/2Z/2RU	open		2Z/2RS/2RU			
dyn. C_r	stat. C_{0r}	Grease	Grease	Oil	F	F_1	F	F_1		d
3860	1570	31000	19000	36000	14,21	20,97	12,90	22,40	19	**10**
4340	1920	24000	16000	29000	17,60	23,80	15,30	25,28	32	
6870	2750	22000	16000	27000	17,70	27,40	17,70	24,30	53	
4340	1910	27000	17000	32000	17,20	24,10	17,20	25,50	22	**12**
5770	2450	22000	15000	27000	18,50	26,20	18,50	27,95	37	
8240	3360	20000	15000	25000	19,30	29,90	19,30	31,90	60	
4750	2270	23000	14000	27000	20,20	26,95	20,20	28,70	30	**15**
6490	3000	20000	13000	24000	21,70	29,50	21,70	31,40	45	
9710	4370	17000	12000	20000	24,50	34,90	24,50	36,80	82	
5090	2630	21000	12000	25000	23,50	30,10	23,50	31,85	39	**17**
8130	3850	17000	12000	21000	24,90	33,60	24,90	35,80	65	
11550	5330	15000	10000	18000	27,50	38,90	27,50	41,10	115	
7960	4050	17000	10000	21000	27,60	35,70	27,60	38,70	69	**20**
10910	5360	15000	9700	17000	29,50	39,50	29,50	40,90	106	
13490	6310	14000	9500	17000	30,00	41,70	30,00	45,40	144	
8550	4690	15000	9000	18000	31,70	40,20	31,70	42,70	80	**25**
11900	7390	13000	8400	15000	34,00	44,20	34,00	45,70	128	
17490	9060	11000	7500	13000	38,10	51,00	38,10	53,20	232	
11240	6610	13000	7500	15000	38,00	47,30	38,00	49,90	116	**30**
16530	9080	11000	7000	13000	40,70	52,80	40,70	55,10	199	
22630	12080	9600	6400	12000	44,90	59,30	44,90	62,35	346	
13560	8250	11000	6500	13000	44,00	54,30	44,00	57,05	155	**35**
21810	12360	9200	6000	11000	47,60	61,60	47,60	64,83	288	
14250	9220	10000	5800	12000	49,20	59,50	49,20	62,50	192	**40**
24730	14330	8300	5400	10000	52,93	67,20	52,93	70,80	366	
15150	9660	9200	5300	11000	54,50	65,75	54,50	69,00	245	**45**
27790	16300	7700	5100	9200	56,56	71,78	56,56	74,48	407	
18510	13260	8400	4800	9900	60,00	71,00	60,00	74,55	261	**50**
29800	18610	7100	4600	8500	63,46	78,68	63,46	81,38	463	
28500	21100	7600	4700	9500					403	**55**
43000	29000	6800	4200	8500					630	
29000	23200	6800	4200	8500					416	**60**
52000	36000	6400	4000	8000					810	
30500	25000	6400	4000	8000					460	**65**
60000	41500	6000	3700	7500					1030	
38000	31000	6000	3750	7500					630	**70**

High precision deep groove ball bearings **with Viton seals**

High precision deep groove ball bearings with **Viton** seals of series 62.. and 63.. can support axial loads from both directions as well as radial loads.

The seals are particularly suitable for applications involving operation at high temperatures. Furthermore, Viton seals are resistant to certain chemical agents (e.g. petrol).

The bearings are produced to internal clearance C4 and are lubricated with a high temperature grease. The rings are heat-stabilised. Operating temperature range –30°C to +200°C.

Tolerances to DIN 620, tolerance class PN.

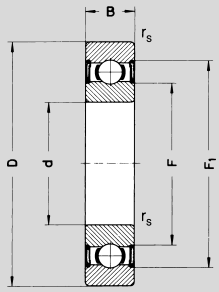

62.. 2RS Viton
63.. 2RS Viton

Diameter [mm]	Designation	Dimensions [mm]						Basic load ratings [N]		Limiting speed [1/min]	Mass [g]
d		d	D	B	F	F_1	r_s(min)	dyn. C_r	stat. C_{0r}	nG	
20	**6204 2RS Viton**	20	47	14	26,2	41,10	1,0	12800	6600	4400	103
	6304 2RS Viton	20	52	15	27,9	44,50	1,1	15900	7900	4100	141
25	**6205 2RS Viton**	25	52	15	31,4	46,30	1,0	14000	7900	3800	133
	6305 2RS Viton	25	62	17	34,9	53,10	1,1	23700	12100	3400	243
30	**6206 2RS Viton**	30	62	16	38,0	54,60	1,0	19500	6800	3200	203
	6306 2RS Viton	30	72	19	41,7	62,30	1,1	28000	15800	2900	356
35	**6207 2RS Viton**	35	72	17	43,8	63,70	1,1	25500	15300	2800	283
	6307 2RS Viton	35	80	21	46,4	68,40	1,5	33500	19100	2600	472
40	**6208 2RS Viton**	40	80	18	49,8	70,70	1,1	29000	17900	2500	373
	6308 2RS Viton	40	90	23	52,9	77,60	1,5	40500	23900	2300	644
45	**6209 2RS Viton**	45	85	19	54,4	76,10	1,1	32500	20500	2300	415
	6309 2RS Viton	45	100	25	59,2	86,70	1,5	53000	31500	2000	851
50	**6210 2RS Viton**	50	90	20	59,4	81,10	1,1	35000	23200	2100	466
	6310 2RS Viton	50	110	27	65,8	95,10	2,0	62000	38000	1800	1100

Larger sizes available by agreement

High precision deep groove ball bearings, **stainless** – **with Viton seals**

High precision deep groove ball bearings with **Viton** seals of series 60.. and 62.. can support axial loads from both directions as well as radial loads.

They are used where there is a risk of corrosion.

Due to the use of Viton seals, the bearings are suitable for applications involving operation at high temperatures.

Furthermore, these seals are resistant to certain chemical agents (e.g. petrol).

The bearings are produced to internal clearance C3 and are lubricated with a high temperature grease. The rings are heat-stabilised. Operating temperature range –30°C to +200°C.

Tolerances to DIN 620, tolerance class PN.

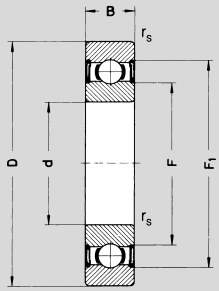

60.. 2RS VA Viton
62.. 2RS VA Viton

Diameter [mm]	Designation	Dimensions [mm]						Basic load ratings [N]		Limiting speed [1/min]	Mass [g]
d		d	D	B	F	F_1	r_s(min)	dyn. C_r	stat. C_{0r}	nG	
10	**6000 2RS VA Viton**	10	26	8	12,9	22,40	0,3	3860	1570	27000	19
	6200 2RS VA Viton	10	30	9	15,3	25,28	0,6	4340	1920	22000	32
12	**6001 2RS VA Viton**	12	28	8	17,2	25,50	0,3	4340	1910	22000	22
	6201 2RS VA Viton	12	32	10	18,5	27,95	0,6	5770	2450	21000	37
15	**6002 2RS VA Viton**	15	32	9	20,2	28,70	0,3	4750	2270	19000	30
	6202 2RS VA Viton	15	35	11	21,7	31,40	0,6	6490	3000	18000	45
17	**6003 2RS VA Viton**	17	35	10	23,5	31,85	0,3	5090	2630	16000	39
	6203 2RS VA Viton	17	40	12	24,9	35,80	0,6	8130	3850	15000	65
20	**6004 2RS VA Viton**	20	42	12	27,6	38,70	0,6	7960	4050	14000	69
	6204 2RS VA Viton	20	47	14	29,5	40,90	1,0	10910	5360	13000	106

Larger sizes available by agreement

Ball bearings
for kiln trucks

These bearings OL 60../62../63..
are exposed to very high temperatures
in applications such as tunnel furnaces.
They are therefore subjected to special
heat treatment and are phosphated.

The internal clearance is in the range between 0,1 and 0,6 mm, in order to compensate for thermal expansion. The bearings are designed with a high temperature lubricant paste for a temperature range between +200°C and +350°C.

They are available in open and 2Z designs.

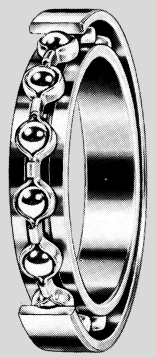

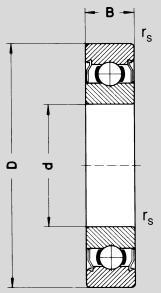

OL 60../62../63..

Diameter [mm]	Designations		Dimensions [mm]			Basic load ratings [N]	Mass [g]
d	open	2Z	D	B	r_s(min)	stat. C_{0r}	
15	**OL 6002**	**OL 6002 2Z**	32	9	0,3	2850	31
	OL 6202	**OL 6202 2Z**	35	11	0,6	3750	44
	OL 6302	**OL 6302 2Z**	42	13	1,0	5400	82
17	**OL 6003**	**OL 6003 2Z**	35	10	0,3	3250	38
	OL 6203	**OL 6203 2Z**	40	12	0,6	4750	63
	OL 6303	**OL 6303 2Z**	47	14	1,0	6550	116
20	**OL 6004**	**OL 6004 2Z**	42	12	0,6	5000	68
	OL 6204	**OL 6204 2Z**	47	14	1,0	6550	105
	OL 6304	**OL 6304 2Z**	52	15	1,1	7800	153
25	**OL 6005**	**OL 6005 2Z**	47	12	0,6	5850	80
	OL 6205	**OL 6205 2Z**	52	15	1,0	7800	128
	OL 6305	**OL 6305 2Z**	62	17	1,1	11400	237
30	**OL 6006**	**OL 6006 2Z**	55	13	1,0	8000	117
	OL 6206	**OL 6206 2Z**	62	16	1,0	11200	200
	OL 6306	**OL 6306 2Z**	72	19	1,1	16300	355
35	**OL 6007**	**OL 6007 2Z**	62	14	1,0	10400	155
	OL 6207	**OL 6207 2Z**	72	17	1,1	15300	300
	OL 6307	**OL 6307 2Z**	80	21	1,5	19000	475
40	**OL 6008**	**OL 6008 2Z**	68	15	1,0	11800	195
	OL 6208	**OL 6208 2Z**	80	18	1,1	18000	375

Larger sizes available by agreement

Deep groove ball bearings with Corrotect® coating

Radial ball bearings of series 60.. 2RS FA125 and 62.. 2RS FA125 have the Corrotect® coating and are therefore suitable for applications where increased protection against corrosion is required.

Lubrication: barium complex soap grease (DIN 51825-KP2N-20) with very good resistance to water and water vapour.

Bearing design before coating: tolerances to DIN 620, tolerance class PN, radial internal clearance C3.

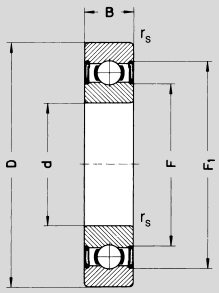

60.. 2RS FA 125
62.. 2RS FA 125

Diameter [mm]	Designation	Dimensions [mm]						Basic load ratings [N]		Limiting speed [1/min]	Mass [g]
d		d	D	B	F	F_1	r_s(min)	dyn. C_r	stat. C_{0r}	nG	
10	**6000 2RS FA 125**	10	26	8	14,4	21,4	0,3	4500	1850	19000	19
	6200 2RS FA 125	10	30	9	16,7	23,2	0,6	6100	2600	17000	32
12	**6001 2RS FA 125**	12	28	8	16,7	23,4	0,3	4900	2150	17000	22
	6201 2RS FA 125	12	32	10	18,2	25,9	0,6	6900	3000	15000	37
15	**6002 2RS FA 125**	15	32	9	20,3	27,0	0,3	5600	2850	14000	30
	6202 2RS FA 125	15	35	11	21,5	29,2	0,6	7800	3750	13000	45
17	**6003 2RS FA 125**	17	35	10	22,8	29,5	0,3	6000	3250	13000	39
	6203 2RS FA 125	17	40	12	24,2	32,9	0,6	9600	4750	12000	65
20	**6004 2RS FA 125**	20	42	12	27,2	35,1	0,6	9400	5000	11000	69
	6204 2RS FA 125	20	47	14	28,5	38,7	1,0	12700	6500	10000	110
25	**6005 2RS FA 125**	25	47	12	32,0	40,3	0,6	11200	6500	10000	80
	6205 2RS FA 125	25	52	15	34,0	44,2	1,0	14000	7800	8500	130
30	**6006 2RS FA 125**	30	55	13	38,2	47,1	1,0	13200	8300	8000	120
	6206 2RS FA 125	30	62	16	40,3	52,1	1,0	19500	11200	7500	200
35	**6007 2RS FA 125**	35	62	14	44,0	54,3	1,0	16000	10300	7000	151

Other designs with Corrotect® coating are available by agreement

High precision self-aligning ball bearings

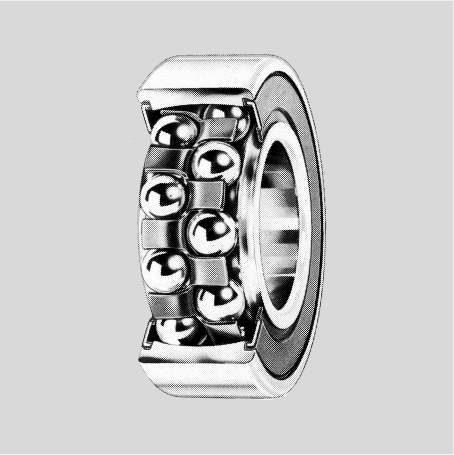

Self-aligning ball bearings of series 1.. / 22.. / 23.. are double row bearings with two raceway grooves in the inner ring and a single concave raceway on the outer ring.

These bearings can compensate for misalignments of up to ±1,5° which cause swivel motion of the inner or outer ring.

Bearings of series 22.. / 23.. have NBR seals and are lubricated for life. Boundary dimensions to DIN 630 Part 1.

Tolerances to DIN 620, tolerance class PN.

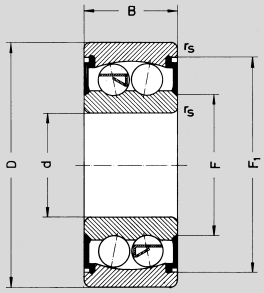

1.. / 22.. / 23.. 2RS

Diameter [mm]	Designation	Dimensions [mm]						Basic load ratings [N]		Limiting speed [1/min]	Mass [g]
d		d	D	B	F	F_1	r_s(min)	dyn. C_r	stat. C_{0r}	nG	
5	**135**	5	19	6	7,0		0,3	2500	475	30000	10
6	**126**	6	19	6	8,0		0,3	2500	475	30000	10
7	**127**	7	22	7	9,0		0,3	2660	555	30000	10
8	**108**	8	22	7	10,0		0,2	2660	555	30000	10
9	**129**	9	26	8	11,0		0,3	3790	802	26000	20
10	**2200 2RS**	10	30	14	14,8	24,9	0,6	5600	1210	18000	50
	2300 2RS	10	35	17	13,96	29,3	0,6	5684	1862	14400	85
12	**2201 2RS**	12	32	14	16,5	28,2	0,6	5700	1300	17000	60
	2301 2RS	12	37	17	17,78	31,8	1,1	7399	2460	13600	91
15	**2202 2RS**	15	35	14	19,5	31,0	0,6	7600	1790	15000	80
	2302 2RS	15	42	17	20,20	34,7	1,1	7450	2640	11200	117
17	**2203 2RS**	17	40	16	22,7	35,5	0,6	8000	2050	14000	100
	2303 2RS	17	47	19	24,1	39,85	1,1	9806	3726	10400	150
20	**2204 2RS**	20	47	18	26,2	40,7	1,0	10000	2650	11000	150
	2304 2RS	20	52	21	27,5	44,15	1,1	9653	3969	8800	219
25	**2205 2RS**	25	52	18	31,4	46,7	1,0	12200	3300	9500	170
30	**2206 2RS**	30	62	20	37,8	54,1	1,0	15700	4700	8000	270
35	**2207 2RS**	35	72	23	44,6	63,6	1,1	15900	5100	7000	420
40	**2208 2RS**	40	80	23	50,0	70,5	1,1	19300	6500	6300	510

High precision self-aligning ball bearings **stainless**

Self-aligning ball bearings of series 22.. are double row bearings with two raceway grooves in the inner ring and a single concave raceway on the outer ring. They are assembled with plastic retainer.

These bearings can compensate for misalignments of up to ±1,5° which cause swivel motion of the inner or outer ring.

Bearings of series 22.. have NBR seals and are lubricated for life. Boundary dimensions to DIN 630 Part 1.

Tolerances to DIN 620, tolerance class PN.

Material: X 65 CR 13 or X 102 CR MO 17.

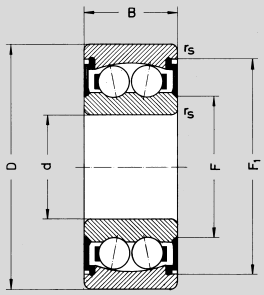

22.. 2RS VA

Diameter [mm]	Designation	Dimensions [mm]				Basic load ratings [N]		Limiting speed [1/min]	Mass [g]
d		d	D	B	r_s(min)	dyn. C_r	stat. C_{0r}	nG	
10	**2200 2RS VA**	10	30	14	0,6	5600	1210	18000	50
12	**2201 2RS VA**	12	32	14	0,6	5700	1300	17000	60
15	**2202 2RS VA**	15	35	14	0,6	7600	1790	15000	80
17	**2203 2RS VA**	17	40	16	0,6	8000	2050	14000	100
20	**2204 2RS VA**	20	47	18	1,0	10000	2650	11000	150
25	**2205 2RS VA**	25	52	18	1,0	12200	3300	9500	170
30	**2206 2RS VA**	30	62	20	1,0	15700	4700	8000	270
35	**2207 2RS VA**	35	72	23	1,1	15900	5100	7000	420
40	**2208 2RS VA**	40	80	23	1,1	19300	6500	6300	510

Larger sizes available by agreement

High precision magneto bearings

High precision magneto bearings are based on the design of deep groove ball bearings.

They have only one shoulder on the outer ring and are therefore particularly easy to fit. The outer ring can be fitted separately from the ball and cage assembly and inner ring (the ball and cage assembly cannot be separated from the inner ring).

The main dimensions conform to DIN 615, the radial internal clearance of all magneto bearings is between 30 and 60 µm.
Magneto bearings are fitted with brass cages.

Tolerances to DIN 620.

The outside diameter of all magneto bearings is uniformly toleranced to between 0 and +0,01 mm.

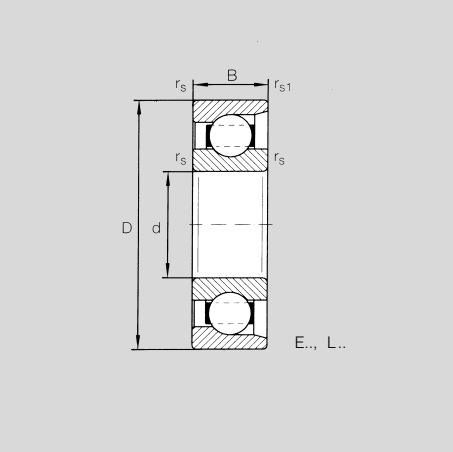

Diameter [mm]	Designation	Dimensions [mm]					Basic load ratings [N]		Limiting speed [1/min]	Mass [g]
d		d	D	B	r_s(min)	r_{s1}(min)	dyn. C_r	stat. C_{0r}	nG	
5	**E 5**	5	16	5	0,15	0,10	1650	202	33000	5
6	**E 6**	6	21	7	0,30	0,15	2410	315	31000	11
7	**E 7**	7	22	7	0,30	0,15	2410	315	29000	13
8	**E 8**	8	24	7	0,30	0,15	3400	455	28000	16
9	**E 9**	9	28	8	0,30	0,15	4450	620	26000	23
10	**E 10**	10	28	8	0,30	0,15	4450	620	26000	22
12	**E 12**	12	32	7	0,30	0,15	3600	590	23000	28
13	**E 13**	13	30	7	0,30	0,15	3600	590	25000	22
15	**E 15**	15	35	8	0,30	0,15	4750	800	20000	34
20	**E 20**	20	47	12	1,00	0,60	9400	1660	14000	89
	L 20	20	47	14	1,00	0,60	9400	1660	14000	100

High precision axial deep groove ball bearings

High precision axial deep groove ball bearings of series 511../512.. consist of a shaft locating washer, a housing locating washer (each with a ball raceway groove) and a ball set retained by a sheet steel cage. They can support high axial loads in one direction. The bearings are not self-retaining. The ball and cage assembly and the shaft locating washer and housing locating washer can therefore be fitted separately.
Tolerances to DIN 711, tolerance class PN
Accuracy class P6, P5 by agreement

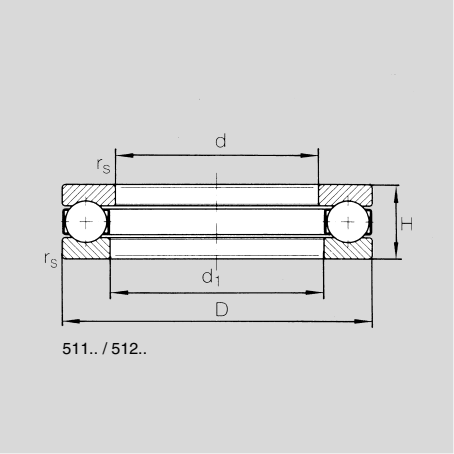

Diameter [mm]	Designation	Dimensions [mm]				Basic load ratings [N]		Limiting speed [1/min]	Mass [g]
d		d_1	D	H	r_s(min)	dyn. C_r	stat. C_{0r}	nG Oil	
10	**511 00**	11,0	24	9,0	0,3	8710	8800	9500	20
12	**511 01**	13,0	26	9,0	0,3	9035	10000	9500	22
15	**511 02**	16,0	28	9,0	0,3	9360	11200	8500	24
17	**511 03**	18,0	30	9,0	0,3	9750	12200	8500	28
20	**511 04**	21,0	35	10,0	0,3	12740	16600	7500	40
	512 04	22,0	40	14,0	0,6	19890	25000	5600	82
25	**511 05**	26,0	42	11,0	0,3	15860	22800	6300	59
	512 05	27,0	47	15,0	0,6	25090	34000	5000	120
30	**511 06**	32,0	47	11,0	0,3	16770	26500	6000	68
	512 06	32,0	52	16,0	0,6	25480	37500	4800	150
35	**511 07**	37,0	52	12,0	0,6	17420	30000	5600	90
	512 07	37,0	62	18,0	1,0	39000	78000	4000	220
40	**511 08**	42,0	60	13,0	0,6	23400	40000	5000	120
	512 08	42,0	68	19,0	1,0	46500	98000	3800	270
45	**511 09**	47,0	65	14,0	0,6	25000	63000	4500	150
	512 09	47,0	73	20,0	1,0	47500	105000	3500	320
50	**511 10**	52,0	70	14,0	0,6	25480	50000	4500	160
	512 10	52,0	78	22,0	0,6	48500	111000	3400	390
55	**511 11**	57,0	78	16,0	0,6	34500	93000	3800	240
	512 11	57,0	90	25,0	1,0	69000	159000	2800	610
60	**511 12**	62,0	85	17,0	1,0	41500	113000	3700	290
	512 12	62,0	95	26,0	1,0	73000	179000	2700	690
65	**511 13**	67,0	90	18,0	1,0	41500	117000	3400	340
	512 13	67,0	100	27,0	1,0	75000	189000	2600	770
70	**511 14**	72,0	95	18,0	1,0	43000	127000	3400	360
	512 14	72,0	105	27,0	1,0	76000	199000	2500	810
90	**511 18**	92,0	120	22,0	1,8	60000	190000	2800	680

Larger sizes available by agreement

High precision axial deep groove ball bearings – stainless

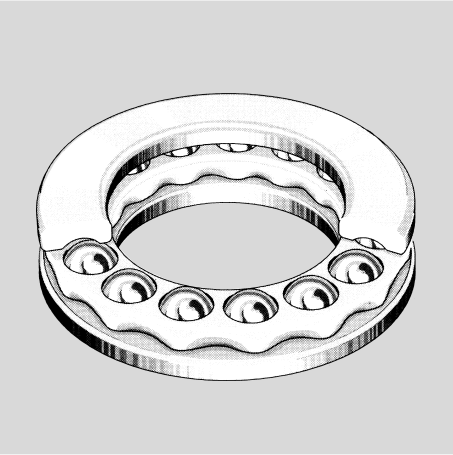

High precision axial deep groove ball bearings of series 511.. VA consist of a shaft locating washer, a housing locating washer (each with a ball raceway groove) and a ball set retained by a sheet steel cage. They can support high axial loads in one direction. The bearings are not self-retaining. The ball and cage assembly and the shaft locating washer and housing locating washer can therefore be fitted separately.

Tolerances to DIN 711, tolerance class PN.

Material: X 65 CR 13 or X 102 CR MO 17.

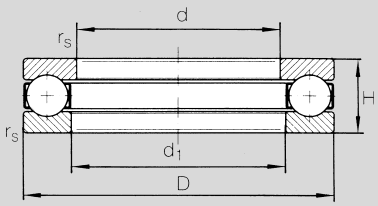

511.. VA

Diameter [mm]	Designation	Dimensions [mm]				Basic load ratings [N]		Limiting speed [1/min]		Mass [g]
d		d_1	D	H	r_s(min)	dyn. C_r	stat. C_{0r}	nG Oil	nG Grease	
10	**511 00 VA**	11,0	24	9,0	0,3	8710	8800	9500	7000	20
12	**511 01 VA**	13,0	26	9,0	0,3	9035	10000	9500	7000	22
15	**511 02 VA**	16,0	28	9,0	0,3	9360	11200	8500	6300	24
17	**511 03 VA**	18,0	30	9,0	0,3	9750	12200	8500	6300	28
20	**511 04 VA**	21,0	35	10,0	0,3	12740	16600	7500	5600	40
25	**511 05 VA**	26,0	42	11,0	0,3	15860	22800	6300	4800	59
30	**511 06 VA**	32,0	47	11,0	0,3	16770	26500	6000	4500	68

Larger sizes available by agreement

High precision deep groove ball bearings with compensation for thermal expansion

Deep groove ball bearings of series WAL are used in order to compensate for differing degrees of thermal expansion between bearings and housings.

For selection of the housing fit, see the information about mounting tolerances in the technical section. In order to prevent damage to the polyamide rings, the housing bore must be provided with a 15° lead chamfer.

The polyamide rings (operating temperature range –20°C to +110°C) on the outer ring prevent creep of the bearing in the housing as a result of circumferential load at increased temperature.

Deep groove ball bearings WAL are supplied as standard with radial internal clearance C3.

Tolerances to DIN 620, tolerance class PN.

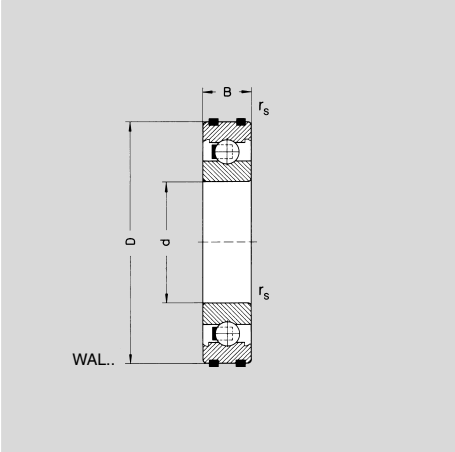

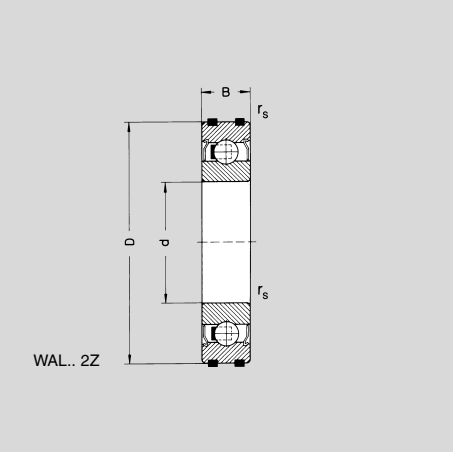

Diameter [mm]	Designation	Dimensions [mm]				Basic load ratings [N]		Limiting speed [1/min]		Mass [g]
d		d	D	B	r_s(min)	dyn. C_r	stat. C_{0r}	nG Oil	nG Grease	
7	**WAL 607 2Z**	7	19	6	0,3	2288	990	–	38000	8
8	**WAL 608 2Z**	8	22	7	0,3	3380	1520	–	34000	12
9	**WAL 629 2Z**	9	26	8	0,3	4615	2140	–	32000	20
10	**WAL 6000 2RS**	10	26	8	0,3	5100	2370	–	16000	22
12	**WAL 6001 2RS**	12	28	8	0,3	5200	2610	–	25400	22
	WAL 61901 2Z	12	24	6	0,3	2950	1450	–	28500	11
	WAL 6001 2Z	12	28	8	0,3	5200	2610	–	25400	22
15	**WAL 61802**	15	24	5	0,3	2220	1180	32000	26000	8
17	**WAL 61903 2Z**	17	30	7	0,15	4750	2330	–	19900	18
	WAL 6003	17	35	10	0,3	5090	2630	18000	–	39

Other designs available by agreement

High precision deep groove ball bearings with TBH cage

Radial ball bearings with a laminated fabric cage (suffix **TBH**) are particularly suitable for high speed applications requiring good emergency running characteristics (e.g. centrifuges, textile spindles, dental equipment). The laminated fabric cage (made from phenolic resin) is guided on the rib of the inner ring and is characterised by high strength and geometrical stability. Bearings with a TBH cage are suitable for temperatures up to 125°C.

Tolerances to DIN 620, tolerance class PN. Other tolerance classes (P6, P5, P4) available by agreement.

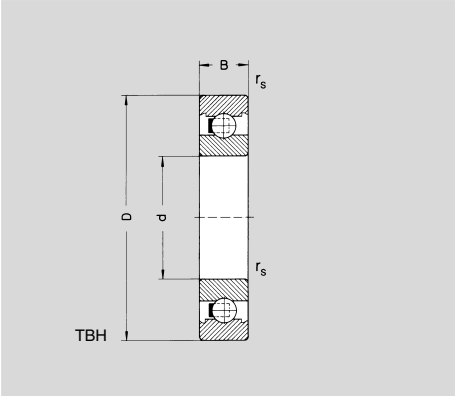

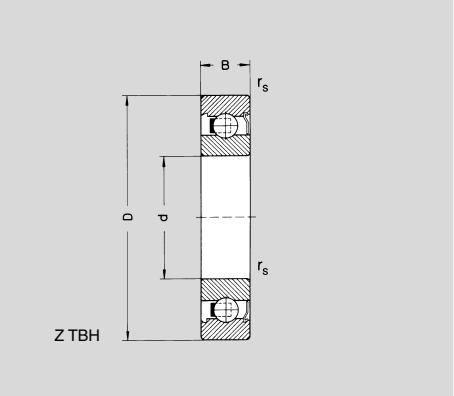

Diameter [mm]	Designation	Dimensions [mm]						Basic load ratings [N]		Limiting speed [1/min]		Mass [g]
d		d	D	B	F	F_1	r_s(min)	dyn. C_r	stat. C_{0r}	Oil	Grease	
4	**624 Z TBH**	4	13	5	6,00	11,35	0,2	900	246	61200	49000	3,15
5	**625 Z TBH**	5	16	5	7,50	13,80	0,3	1730	630	56000	44800	5,00
6	**626 Z TBH**	6	19	6	8,50	16,50	0,3	2340	890	52000	41600	8,40
7	**607 Z TBH**	7	19	6	9,00	16,50	0,3	2360	910	50400	40300	7,50
	627 Z TBH	7	22	7	10,50	19,03	0,3	3250	1350	49000	39200	13,00
8	**608 Z TBH**	8	22	7	10,50	19,03	0,3	3300	1370	49000	39200	12,00
9	**609 Z TBH**	9	24	7	12,10	20,48	0,3	3350	1430	45600	36500	14,00
	629 Z TBH	9	26	8	13,90	22,38	0,3	4550	1950	43000	34400	20,00
10	**6000 Z TBH**	10	26	8	14,40	21,40	0,3	4600	1950	48000	38400	19,00
	6200 Z TBH	10	30	9	16,70	23,20	0,6	6100	2600	34800	27800	32,00
12	**6001 Z TBH**	12	28	8	16,70	23,40	0,3	5100	2350	44400	37000	22,00
	6201 Z TBH	12	32	10	18,20	25,90	0,6	6900	3000	31600	25300	37,00
15	**6002 Z TBH**	15	32	9	20,30	27,00	0,3	5600	2850	26400	22000	30,00
	6202 Z TBH	15	35	11	21,50	29,20	0,6	7700	3500	27300	21900	45,00
17	**6003 Z TBH**	17	35	10	22,80	29,50	0,3	6000	3250	34800	29000	39,00
20	**6004 Z TBH**	20	42	12	27,20	35,10	0,6	9400	5000	24500	19600	69,00
	6204 Z TBH	20	47	14	28,50	38,70	1,0	12700	6500	21600	17300	110,00
25	**6005 Z TBH**	25	47	12	32,00	40,30	0,6	11200	6500	21600	17300	80,00
	6205 Z TBH	25	52	15	34,00	44,20	1,0	14000	7800	17300	13800	130,00
30	**6206 Z TBH**	30	62	16	40,30	52,10	1,0	19500	11200	14400	11500	200,00

Radial insert ball bearings – stainless

These stainless radial insert ball bearings of series GYE..KRRB VA are intended for applications in which increased corrosion resistance is required.

The rings and balls are made from a corrosion-resistant, high alloy steel with increased chromium and molybdenum content which gives excellent corrosion resistance. The cages are made from stainless-steel or plastic.

The grub screws and outer shields are also made from stainless-steel material, while the seals are made from NBR with steel reinforcement.

The internal clearance is C3.

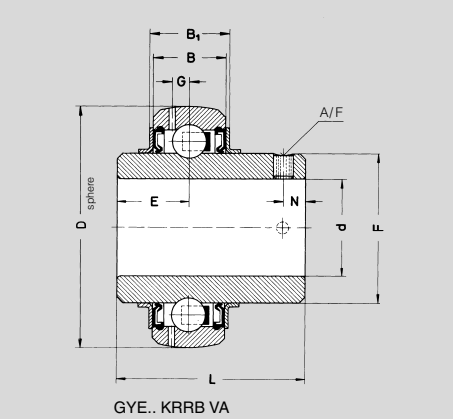

GYE.. KRRB VA

Diameter [mm] d	Designation	Dimensions [mm] d	B	B_1	D	E	F	G	L	N	A/F	Basic load ratings [N] dyn. C	stat. C_0	Mass [g]
12	**GYE 12 KRRB VA**	12	12	13,5	40,0	9,6	23,9	3,3	25,0	4,0	2,5	9600	4750	110
15	**GYE 15 KRRB VA**	15	12	13,5	40,0	9,6	23,9	3,3	25,0	4,0	2,5	9600	4750	100
17	**GYE 17 KRRB VA**	17	12	13,5	40,0	9,6	23,9	3,3	25,0	4,0	2,5	9600	4750	90
20	**GYE 20 KRRB VA**	20	16	17,5	47,0	12,7	29,0	4,0	31,0	5,0	2,5	12800	6600	180
25	**GYE 25 KRRB VA**	25	17	18,5	52,0	14,3	34,0	4,5	34,0	5,5	2,5	14000	7800	210
30	**GYE 30 KRRB VA**	30	19	20,5	62,0	15,9	40,4	5,2	38,1	6,0	3,0	19500	11300	400
35	**GYE 35 KRRB VA**	35	20	21,5	72,0	17,5	47,4	5,6	42,9	6,5	3,0	25500	15300	430
40	**GYE 40 KRRB VA**	40	21	22,5	80,0	19,0	52,7	5,9	49,2	8,0	4,0	32500	19800	630
50	**GYE 50 KRRB VA**	50	23	24,5	90,0	32,6	63,0	6,5	51,6	9,0	5,0	30200	18600	780

Plummer block housings – plastic

These plummer block housings are made from PBTP reinforced by glass fibre and have excellent resistance to moisture, UV radiation, bacterial and fungal attack as well as most chemical agents.
They are combined with a stainless-steel bearing. The plastic housings can be subjected to radial (static) loads up to the load carrying capacity C_g and axial loads up to max. 0,25 C_g.
The maximum operating temperature is 80°C (continuous operation).
End caps are supplied loose with the housings.

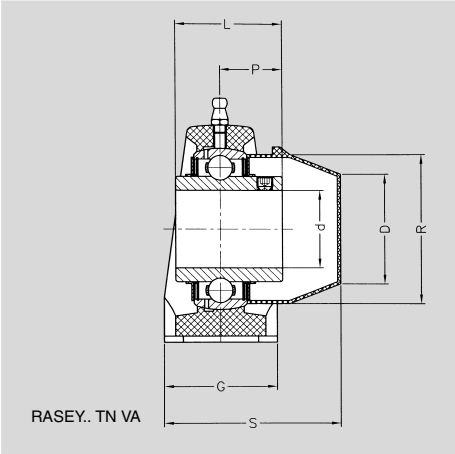

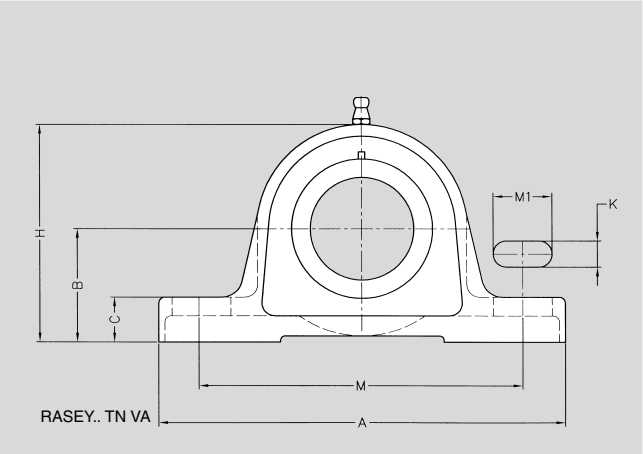

Dia-meter [mm]	Designation	Dimensions [mm]														Basic load ratings [N]			Mass [g]
d		d	A	B	C	D	G	H	K	L	M	M_1	P	R_1	S	Housing C	dyn. C	stat. C_0	
20	**RASEY 20 TN VA**	20	127	33,3	14,2	43	38	65	11	31,0	95	14	18,3	50	51	8800	12800	6600	290
25	**RASEY 25 TN VA**	25	140	36,5	14,6	48	38	71	11	34,0	105	14	19,6	55	54	13700	14000	7800	350
30	**RASEY 30 TN VA**	30	162	42,9	17,8	54	46	83	14	38,1	119	18	22,2	64	65	12600	19500	11300	520
35	**RASEY 35 TN VA**	35	167	47,6	18,0	62	48	94	14	42,9	127	18	25,4	74	69	12750	25500	15300	770
40	**RASEY 40 TN VA**	40	184	49,2	19,5	70	54	98	14	49,2	137	18	30,2	84	83	13800	32500	19800	970
50	**RASEY 50 TN VA**	50	206	57,2	23,0	75	60	114	17	51,6	159	20	32,6	94	92	13850	30200	18600	1320

Plummer block housings – plastic

These plummer block housings are made from PBTP reinforced by glass fibre and have excellent resistance to moisture, UV radiation, bacterial and fungal attack as well as most chemical agents.
They are combined with a stainless-steel bearing.
The plastic housings can be subjected to radial (static) loads up to the load carrying capacity C_g and axial loads up to max. 0,25 C_g.
The maximum operating temperature is 80°C (continuous operation).
End caps are supplied loose with the housings.

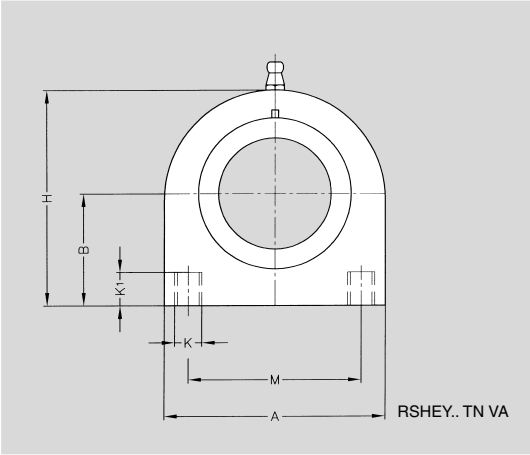

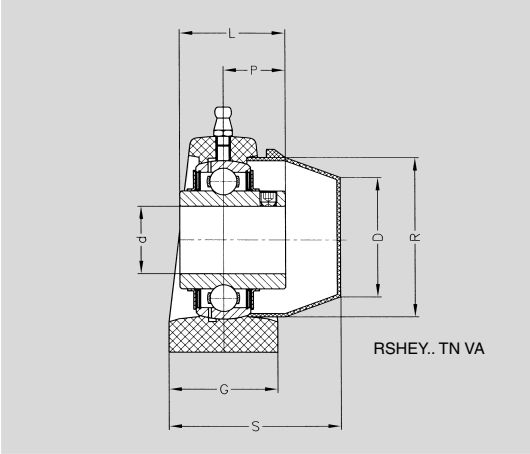

Diameter [mm]	Designation	Dimensions [mm]													Basic load ratings [N]			Mass [g]
d		d	A	B	D	G	H	K	K_1	L	M	P	R	S	Housing C	dyn. C	stat. C_0	
20	**RSHEY 20 TN VA**	20	72,8	33,3	43,0	34,5	66,0	M8	12,0	31,0	50,8	18,3	50,0	49,0	8200	12800	6600	290
25	**RSHEY 25 TN VA**	25	76,2	36,5	48,0	39,5	73,0	M10	12,0	34,0	50,8	19,6	55,0	54,0	8500	14000	7800	350
30	**RSHEY 30 TN VA**	30	101,0	42,9	54,0	42,5	84,0	M10	12,0	38,1	76,2	22,2	64,0	61,0	10300	19500	11300	520
35	**RSHEY 35 TN VA**	35	110,0	47,6	62,0	47,5	95,0	M10	15,5	42,9	82,6	25,4	74,0	69,0	12100	25500	15300	770
40	**RSHEY 40 TN VA**	40	120,0	49,2	70,0	48,0	101,0	M12	16,0	49,2	88,9	30,2	84,0	75,0	12200	32500	19800	1010
50	**RSHEY 50 TN VA**	50	135,0	57,2	75,0	54,0	115,0	M16	20,0	51,6	101,6	32,6	94,0	90,0	13800	30200	18600	1250

Four-bolt flanged housings – plastic

These four-bolt flanged housings are made from PBTP reinforced by glass fibre and have excellent resistance to moisture, UV radiation, bacterial and fungal attack as well as most chemical agents. They are combined with a stainless bearing.
The plastic housings can be subjected to radial (static) loads up to the load carrying capacity C_g and axial loads up to max. 0,25 C_g.
The maximum operating temperature is 80°C (continuous operation).
End caps are supplied loose with the housings.

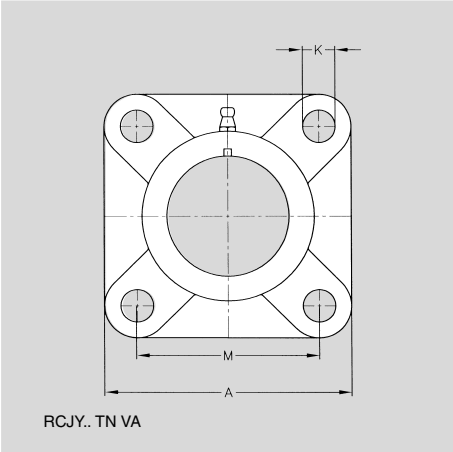

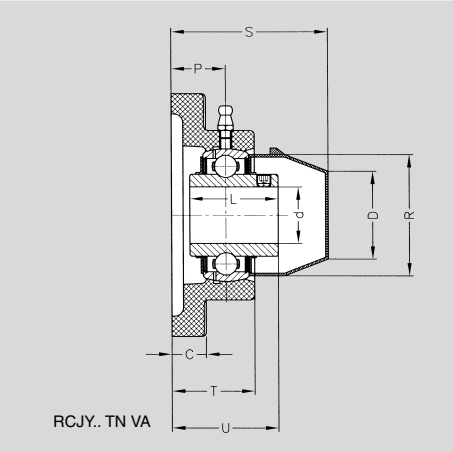

Diameter [mm]	Designation	Dimensions [mm]												Basic load ratings [N]			Mass [g]
d		d	A	C	D	K	L	M	P	T	U	R	S	Housing C	dyn. C	stat. C_0	
20	**RCJY 20 TN VA**	20	86	13,4	43	11	31,0	63,5	18,0	27,8	36,3	50	48	10200	12800	6600	290
25	**RCJY 25 TN VA**	25	94,5	14,3	48	11	34,0	70,0	17,0	27,9	36,7	55	50	12100	14000	7800	340
30	**RCJY 30 TN VA**	30	107	14,3	54	11	38,1	83,0	19,2	31,5	41,4	64	59	17700	19500	11300	520
35	**RCJY 35 TN VA**	35	117	15,5	62	13	42,9	92,0	21,5	34,8	46,9	74	64	18500	25500	15300	760
40	**RCJY 40 TN VA**	40	130	17,0	70	14	49,2	102,0	23,0	37,5	53,2	84	71	19200	32500	19800	970
50	**RCJY 50 TN VA**	50	143	21,0	75	17	51,6	111,0	25,0	43,0	57,2	94	86	19600	30200	18600	1250

Two-bolt flanged housings – plastic

These two-bolt flanged housings are made from PBTP reinforced by glass fibre and have excellent resistance to moisture, UV radiation, bacterial and fungal attack as well as most chemical agents. They are combined with a stainless bearing. The plastic housings can be subjected to radial (static) loads up to the load carrying capacity C_g and axial loads up to max. 0,25 C_g.

The maximum operating temperature is 80°C (continuous operation).

End caps are supplied loose with the housings.

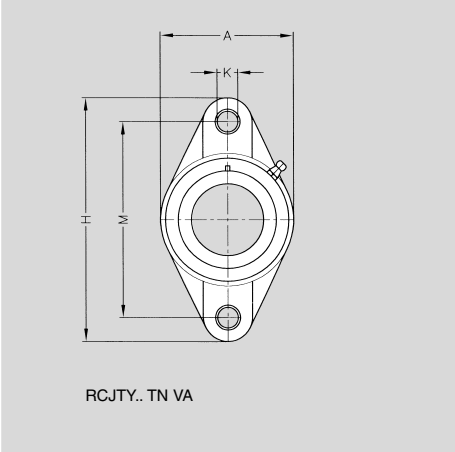

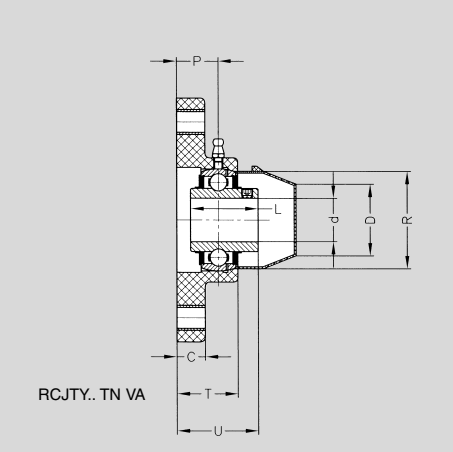

Dia-meter [mm]	Designation	Dimensions [mm]													Basic load ratings [N]			Mass [g]
d		d	A	C	D	H	K	L	M	P	R	S	T	U	Housing C	dyn. C	stat. C_0	
20	**RCJTY 20 TN VA**	20	64,0	11,4	43,0	113,0	11,0	31,0	90,0	15,4	50,0	46,0	26,5	33,7	11000	12800	6600	240
25	**RCJTY 25 TN VA**	25	70,0	13,5	48,0	130,0	11,0	34,0	99,0	17,0	55,0	51,0	29,1	36,7	13800	14000	7800	320
30	**RCJTY 30 TN VA**	30	80,0	13,3	54,0	148,0	11,0	38,1	117,0	19,0	64,0	57,0	30,5	41,2	13300	19500	11300	470
35	**RCJTY 35 TN VA**	35	90,0	16,1	62,0	163,0	13,0	42,9	130,0	18,0	74,0	62,0	32,8	43,4	13900	25500	15300	680
40	**RCJTY 40 TN VA**	40	100,0	20,0	70,0	175,0	14,0	49,2	144,0	21,5	84,0	72,0	37,5	51,7	14000	32500	19800	880
50	**RCJTY 50 TN VA**	50	115,0	21,0	75,0	197,0	17,0	51,6	144,0	21,5	84,0	72,0	37,5	51,7	14500	30200	18600	1200

Take-up housing unit – **plastic**

These take-up housing units are made from PBTP reinforced by glass fibre and have excellent resistance to moisture, UV radiation, bacterial and fungal attack as well as most chemical agents. They are combined with a stainless-steel bearing. The plastic housings can be subjected to radial (static) loads up to the load carrying capacity C_g and axial loads up to max. 0,25 C_g.

The maximum operating temperature is 80°C (continuous operation).

End caps are supplied loose with the housings.

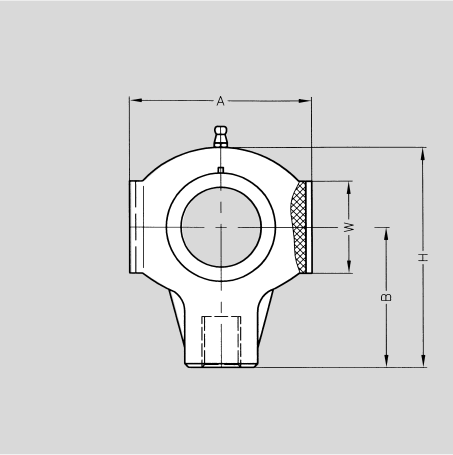

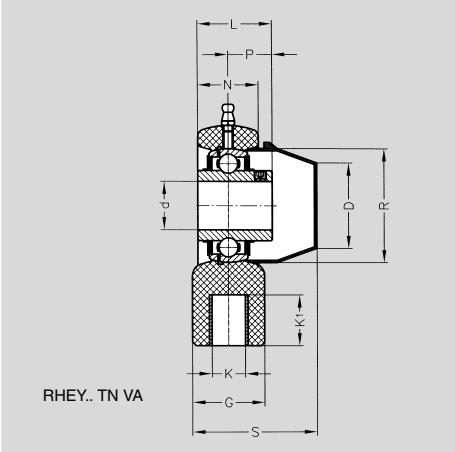

RHEY.. TN VA

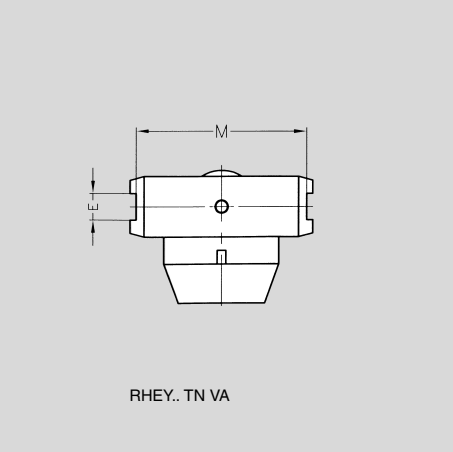

RHEY.. TN VA

Diameter [mm]	Designation	Dimensions [mm]															Basic load ratings [N]			Mass [g]
d		A	B	D	E	G	H	K	K_1	L	M	N	P	R	S	W	Housing C	dyn. C	stat. C_0	
20	**RHEY 20 TN VA**	88,0	64,0	43,0	12,0	35,0	99,0	M16	20,0	31,0	76,0	28,0	18,3	50,0	51,0	47,0	8000	12800	6600	400
25	**RHEY 25 TN VA**	88,0	64,0	48,0	12,0	35,0	99,0	M16	20,0	34,0	76,0	28,0	19,6	55,0	53,0	47,0	8000	14000	7800	420
30	**RHEY 30 TN VA**	102,0	76,0	54,0	12,0	40,0	125,0	M16	20,0	38,1	89,0	34,5	22,2	64,0	62,0	63,0	11800	19500	11300	650
35	**RHEY 35 TN VA**	102,0	76,0	62,0	12,0	40,0	125,0	M16	20,0	42,9	89,0	34,5	25,4	74,0	64,0	63,0	12300	25500	15300	790
40	**RHEY 40 TN VA**	114,0	85,0	70,0	16,0	40,0	140,0	M16	20,0	49,2	102,0	34,0	30,2	84,0	70,0	80,0	12700	32500	19800	1020
50	**RHEY 50 TN VA**	117,0	90,0	75,0	16,0	50,0	149,0	M20	23,0	51,6	102,0	40,0	32,6	94,0	90,0	85,0	18800	30200	18600	1250

Plummer block housing unit – **stainless**

These housing units consist of a stainless-steel housing combined with a stainless bearing.

The parts have excellent resistance to moisture and most chemical agents.

The maximum operating temperature is 110°C.

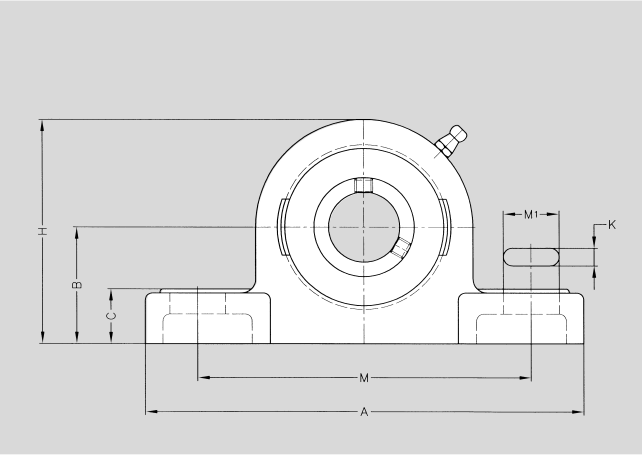

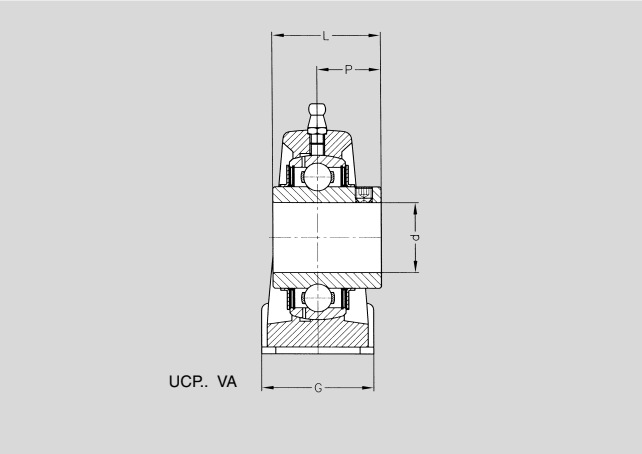

Dia-meter [mm]	Designation	Dimensions [mm]												Basic load ratings [N]		Mass [g]
d		d	A	B	C	G	H	K	L	M	M_1	P	Base screws	dyn. C_r	stat. C_{0r}	
12	**UCP 201 VA**	12	127	30,2	14	38	62	12	27,4	95	19	15,9	M10	9600	4750	500
15	**UCP 202 VA**	15	127	30,2	14	38	62	12	27,4	95	19	15,9	M10	9600	4750	500
17	**UCP 203 VA**	17	127	30,2	14	38	62	12	27,4	95	19	15,9	M10	9600	4750	500
20	**UCP 204 VA**	20	127	33,3	15	38	65	12	31,0	95	19	18,3	M10	12800	6600	600
25	**UCP 205 VA**	25	140	36,5	16	38	70	12	34,1	105	19	19,8	M10	14000	7800	700
30	**UCP 206 VA**	30	165	42,9	18	48	83	15	38,1	121	21	22,2	M12	19500	11200	1300
35	**UCP 207 VA**	35	167	47,6	19	48	94	15	42,9	127	21	25,4	M12	25500	15300	1700
40	**UCP 208 VA**	40	184	49,2	19	54	100	15	49,2	137	23	30,2	M12	32500	19800	2100
45	**UCP 209 VA**	45	190	54,0	20	54	108	15	49,2	146	23	30,2	M12	33100	21600	2800
50	**UCP 210 VA**	50	206	57,2	22	60	114	19	51,6	159	25	32,6	M16	35100	23200	3200

Four-bolt flanged housing unit – stainless

These housing units consist of a stainless-steel housing combined with a stainless bearing.

The parts have excellent resistance to moisture and most chemical agents.

The maximum operating temperature is 110°C.

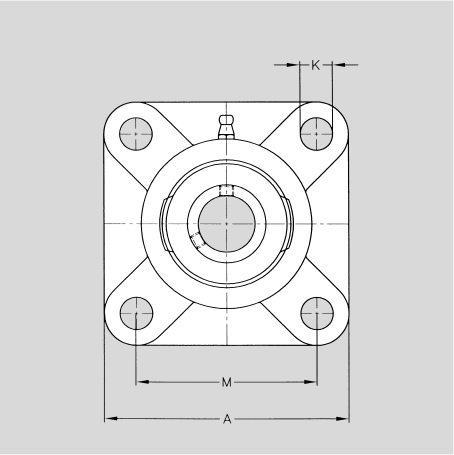

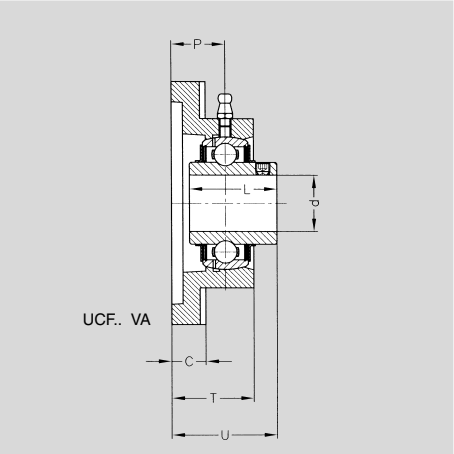

Dia-meter [mm]	Designation	Dimensions [mm]										Basic load ratings [N]		Mass [g]
d		d	A	C	K	L	M	P	T	U	Base screws	dyn. C_r	stat. C_{0r}	
12	**UCF 201 VA**	12	76	11	12	27,4	54,0	15	24	30,9	M10	9600	4750	500
15	**UCF 202 VA**	15	76	11	12	27,4	54,0	15	24	30,9	M10	9600	4750	500
17	**UCF 203 VA**	17	76	11	12	27,4	54,0	15	24	30,9	M10	9600	4750	500
20	**UCF 204 VA**	20	86	11	12	31,0	63,5	15	25	33,3	M10	12800	6600	700
25	**UCF 205 VA**	25	95	13	12	34,1	70,0	16	26,5	35,8	M10	14000	7800	1000
30	**UCF 206 VA**	30	108	13	15	38,1	82,5	18	30	40,2	M12	19500	11200	1300
35	**UCF 207 VA**	35	117	14	15	42,9	92,0	19	33	44,4	M12	25500	15300	1700
40	**UCF 208 VA**	40	130	14	15	49,2	101,5	21	36	51,2	M12	32500	19800	2200
45	**UCF 209 VA**	45	137	14	15	49,2	105,0	22	38	52,2	M12	33100	21600	2600
50	**UCF 210 VA**	50	143	15	19	51,6	111,0	22	39	54,6	M16	35100	23200	2800

Two-bolt flanged housing unit – stainless

These housing units consist of a stainless-steel housing combined with a stainless bearing.

The parts have excellent resistance to moisture and most chemical agents.

The maximum operating temperature is 110°C.

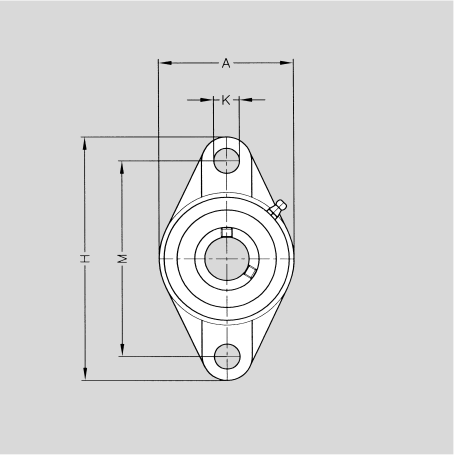

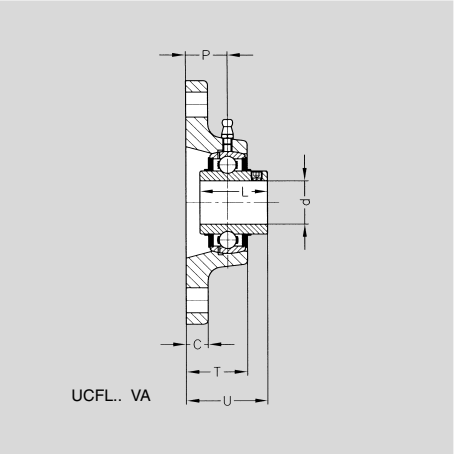

Diameter [mm]	Designation	Dimensions [mm]											Basic load ratings [N]		Mass [g]
d		d	A	C	H	K	L	M	P	T	U	Base screws	dyn. C_r	stat. C_{0r}	
12	**UCFL 201 VA**	12	55	11	98,5	12	27,4	76,5	15	24,0	30,9	M10	9600	4750	400
15	**UCFL 202 VA**	15	55	11	98,5	12	27,4	76,5	15	24,0	30,9	M10	9600	4750	400
17	**UCFL 203 VA**	17	55	11	98,5	12	27,4	76,5	15	24,0	30,9	M10	9600	4750	400
20	**UCFL 204 VA**	20	60	11	112,0	12	31,0	90,0	15	25,0	33,3	M10	12800	6600	600
25	**UCFL 205 VA**	25	68	13	124,0	12	34,1	99,0	16	26,5	35,8	M10	14000	7800	900
30	**UCFL 206 VA**	30	80	13	141,0	15	38,1	116,5	18	30,0	40,2	M12	19500	11200	1100
35	**UCFL 207 VA**	35	90	14	155,5	15	42,9	130,0	19	33,0	44,4	M12	25500	15300	1400
40	**UCFL 208 VA**	40	100	14	171,5	15	49,2	143,5	21	36,0	51,2	M12	32500	19800	1900
45	**UCFL 209 VA**	45	108	14	179,0	15	49,2	148,5	22	38,0	52,2	M12	33100	21600	2200
50	**UCFL 210 VA**	50	115	15	189,0	19	51,6	157,0	22	39,0	54,6	M16	35100	23200	2500

The e-catalogue from SBN GmbH...

Here to help, 24 hours a day

Customer service means being available.

On our homepage you will find an electronic catalogue you can use to order online all the products you see in this printed version - even if others have long since finished for the day.

Services like our 24 h emergency hotline are there to show our customers that they are always well served in all respects.

www.sbn.de

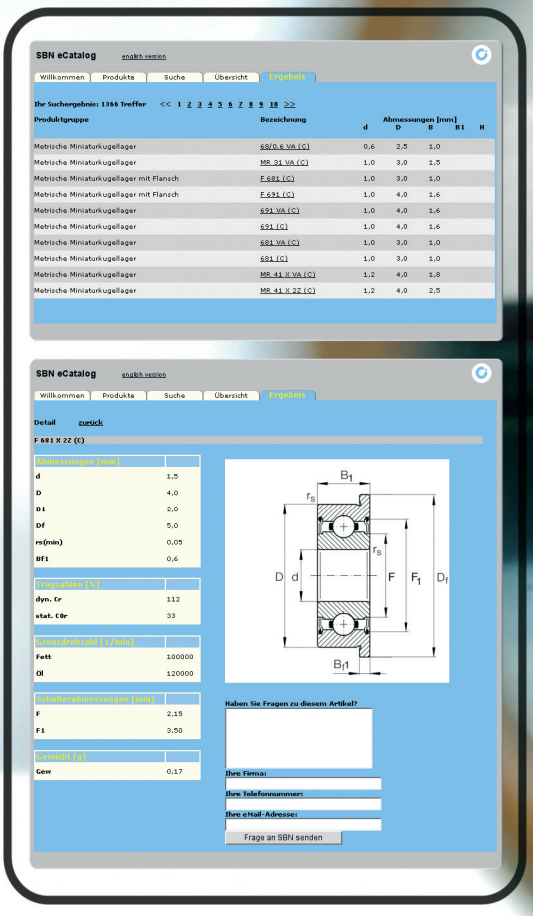

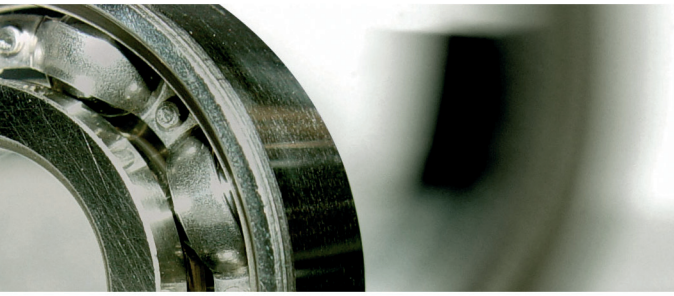

Your sales team at SBN GmbH…

We keep the workflow moving

Skilled order processing…

At SBN, everything revolves around you, our customers. Our expertise and many years of know-how mean we are a skilled partner to industry.

Put us to the test, we look forward to hearing from you.

Wolfgang Hutzel
Tel.: 0 68 41-75 63 00
info@sbn.de

Arno Rech
Tel.: 0 68 41-75 63 08
a.rech@sbn.de

Jan Hutzel
Tel.: 0 68 41-703 01 20
j.hutzel@sbn.de

Erika Hutzel
Tel.: 0 68 41-75 63 07
e.hutzel@sbn.de

Hella Lang
Tel.: 0 68 41-75 63 01
h.lang@sbn.de

Silvia Morsch
Tel.: 0 68 41-75 63 02
s.morsch@sbn.de

Natalia Schick
Tel.: 0 68 41-703 01 20
n.schick@sbn.de

SBN, the German representative of Sapporo Prec. Inc.

Our mission: quality

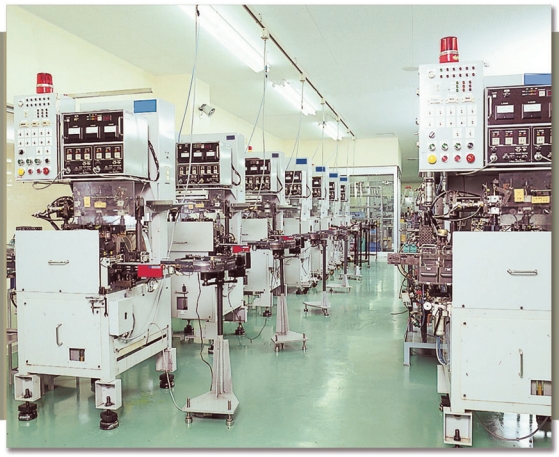

We are the representative in Germany of Sapporo Precision Inc. / Japan.

Sapporo Prec. (Inc.) is one of the major manufacturers of miniature ball bearings, thin section bearings, stainless-steel bearings and special ball bearings. High precision ball bearings are sold under the brand names EZO and SPB.